CITY OF TRACY

SAN JOAQUIN COUNTY, CALIFORNIA

Think Inside the Triangle™

Development Services Department
333 Civic Center Plaza,
Tracy, California 95376
Phone: (209) 831-6400
Fax: (209) 831-4430

BOOK 2 OF 3 – TECHNICAL SPECIAL PROVISIONS
CONTRACT DOCUMENTS

For the Construction
of

11TH STREET EAST TRACY OVERHEAD BRIDGE REPLACEMENT
(N. MacArthur Drive to Cabe Road)
CIP 73063
Federal Project No. BHLS-5192(020)

(FEDERAL DAVIS-BACON WAGE COMPLIANCE REQUIREMENTS APPLY)
NUMBER OF FEDERAL TRAINEES: 12
CONTRACT DBE GOAL: 7.1%

BID OPENING: TUESDAY, MARCH 3, 2015 @ 2:00 PM

Approved for Construction:

1/29/2015

Kuldeep Sharma, P.E. Date
ACTING CITY ENGINEER/PROJECT DIRECTOR

BID SET COPY ____

THIS PAGE
INTENTIONALLY LEFT
BLANK

11TH STREET EAST TRACY OVERHEAD BRIDGE REPLACEMENT
(N. MacArthur Drive to Cabe Road)
CIP 73063
Federal Project No. BHLS-5192(020)

(FEDERAL DAVIS-BACON WAGE COMPLIANCE REQUIREMENTS APPLY)
DESIGN CERTIFICATIONS

The Plans and Technical Specifications contained herein have been prepared by, or under the responsible charge of, the following registered person(s):

ROADWAY & STRUCTURES:

REGISTERED PROFESSIONAL ENGINEER
DENNIS M. HAGLAN
No. C-51985
Exp. 9-30-16
CIVIL
STATE OF CALIFORNIA

REGISTERED CIVIL ENGINEER

ELECTRICAL:

REGISTERED PROFESSIONAL ENGINEER
JOSE J. OSTDIEK
C 65334
EXP. 9-30-15
CIVIL
STATE OF CALIFORNIA

REGISTERED CIVIL ENGINEER

SEWER & WATER:

REGISTERED PROFESSIONAL ENGINEER
DAN R. SCHACK
No. 32158
Exp. 12-31-16
CIVIL
STATE OF CALIFORNIA

REGISTERED CIVIL ENGINEER

LANDSCAPE:

LICENSED LANDSCAPE ARCHITECT
RONALD L. POLHEMUS
NO. 3716
SIGNATURE
2/01/15
RENEWAL DATE
12/5/14
DATE
STATE OF CALIFORNIA

REGISTERED LANDSCAPE ARCHITECT

THIS PAGE INTENTIONALLY LEFT BLANK

TABLE OF CONTENTS

SPECIAL NOTICES 3
STANDARD PLANS LIST 5
BID ITEM LIST 9
DIVISION I GENERAL PROVISIONS 19
1 GENERAL 19
2 BIDDING 20
5 CONTROL OF WORK 20
7 LEGAL RELATIONS AND RESPONSIBILITY TO THE PUBLIC 34
8 PROSECUTION AND PROGRESS 35
9 PAYMENT 35
DIVISION II GENERAL CONSTRUCTION 37
10 GENERAL 37
11 QUALITY CONTROL AND ASSURANCE 39
12 TEMPORARY TRAFFIC CONTROL 39
13 WATER POLLUTION CONTROL 49
14 ENVIRONMENTAL STEWARDSHIP 49
15 EXISTING FACILITIES 69
DIVISION III GRADING 75
16 CLEARING AND GRUBBING 75
19 EARTHWORK 76
20 LANDSCAPE 77
21 EROSION CONTROL 98
DIVISION V SURFACINGS AND PAVEMENTS 99
39 HOT MIX ASPHALT 99
DIVISION VI STRUCTURES 101
47 EARTH RETAINING SYSTEMS 101
48 TEMPORARY STRUCTURES 106
49 PILING 113
51 CONCRETE STRUCTURES 117
56 SIGNS 120
59 PAINTING 122

DIVISION VII DRAINAGE 123
65 CONCRETE PIPE 123
68 SUBSURFACE DRAINS 123
70 MISCELLANEOUS DRAINAGE FACILITIES 126
71 TEMPORARY DETOUR DRAINAGE 127
DIVISION VIII MISCELLANEOUS CONSTRUCTION 129
72 SLOPE PROTECTION 129
73 CONCRETE CURBS AND SIDEWALKS 129
75 MISCELLANEOUS METAL 129
77 LOCAL INFRASTRUCTURE 130
DIVISION IX TRAFFIC CONTROL FACILITIES 143
83 RAILINGS AND BARRIERS 143
86 ELECTRICAL SYSTEMS 146
DIVISION X MATERIALS 167
90 CONCRETE 167
96 PORCELAIN ENAMEL SIGN 167
97 BRONZE PLAQUE 171
DIVISION XI BUILDING CONSTRUCTION 173
99 BUILDING CONSTRUCTION 173

SPECIAL PROVISIONS

ORGANIZATION

Special provisions are under headings that correspond with the main-section headings of the *Standard Specifications*. A main-section heading is a heading shown in the table of contents of the *Standard Specifications*.

Each special provision begins with a revision clause that describes or introduces a revision to the *Standard Specifications* as revised by any revised standard specification.

Any paragraph added or deleted by a revision clause does not change the paragraph numbering of the

Standard Specifications for any other reference to a paragraph of the *Standard Specifications*.

THIS PAGE INTENTIONALLY LEFT BLANK

****

SPECIAL NOTICES

****

- THIS PROJECT HAS A SPECIAL FUNDING AGREEMENT BETWEEN THE CITY OF TRACY AND CALTRANS AS SUMMARIZED BELOW:

  a. Caltrans has programmed approximately $20 million for the 14/15 Fiscal Year. The remaining funds are expected to be programmed in FY 15/16 and FY 16/17.

  b. The City's goal is to spend at a minimum 50% of the money programmed in any given fiscal year, which includes being invoiced and paid by Caltrans in order to guarantee additional funds for the following fiscal year. The contractor must submit an expenditure schedule of funds by fiscal year at the preconstruction meeting for review and approval by the City.

  As a result of this agreement, you are encouraged to:

  a. Submit progress payments in order to assist the Contractor with cash flow and the City with their cost agreement with Caltrans (refer to sections 9-1.03 and 9-1.16C in these provisions).

  As a result of the Special Funding Agreement, you must adhere to the following requirements:

  a. You must be prompt with monthly invoicing and must submit mid-month and end of month invoices in April, May, and June of each year.

- Work within the open, vegetated unnamed north south drainage canal to the San Joaquin River must be done between June15th to October 31st.

- Work involving the open West Side Irrigation District (WSID) canals must be done between November 1st and March 1st. You may coordinate with WSID for possible work outside of this work window.

THIS PAGE INTENTIONALLY LEFT BLANK

STANDARD PLANS LIST

The standard plan sheets applicable to this Contract include those listed below. The applicable revised standard plans (RSPs) listed below are included in the project plans.

ABBREVIATIONS, LINES, SYMBOLS AND LEGEND

A10A	**Abbreviations (Sheet 1 of 2)**
RSP A10B	**Abbreviations (Sheet 2 of 2)**
A10C	**Lines and Symbols (Sheet 1 of 3)**
A10D	**Lines and Symbols (Sheet 2 of 3)**
A10E	**Lines and Symbols (Sheet 3 of 3)**

PAVEMENT MARKERS, TRAFFIC LINES, AND PAVEMENT MARKINGS

A20A	**Pavement Markers and Traffic Lines, Typical Details**
A20B	**Pavement Markers and Traffic Lines, Typical Details**
A20D	**Pavement Markers and Traffic Lines, Typical Details**
RSP A24A	**Pavement Markings - Arrows**
A24B	**Pavement Markings - Arrows and Symbols**
RSP A24C	**Pavement Markings - Symbols and Numerals**
A24D	**Pavement Markings - Words**
RSP A24E	**Pavement Markings - Words, Limit and Yield Lines**
RSP A24F	**Pavement Markings - Crosswalks**
A62C	**Limits of Payment for Excavation and Backfill – Bridge**

OBJECT MARKERS, DELINEATORS, CHANNELIZERS AND BARRICADES

A73A	**Object Markers**
A73B	**Markers**
A73C	**Delineators, Channelizers and Barricades**

CURBS, DRIVEWAYS, DIKES, CURB RAMPS AND ACCESSIBLE PARKING

RSP A87A	**Curbs and Driveways**
RSP A87B	**Hot Mix Asphalt Dikes**
RSP A88A	**Curb Ramp Details**
RSP A88B	**Curb Ramp and Island Passageway Details**

TEMPORARY CRASH CUSHIONS, RAILING AND TRAFFIC SCREEN

T3A	**Temporary Railing (Type K)**
T3B	**Temporary Railing (Type K)**
T51	**Temporary Water Pollution Control Details (Temporary Silt Fence)**
T56	**Temporary Water Pollution Control Details (Temporary Fiber Roll)**
T58	**Temporary Water Pollution Control Details (Temporary Construction Entrance)**
T59	**Temporary Water Pollution Control Details (Temporary Concrete Washout Facility)**

T60	**Temporary Water Pollution Control Details (Temporary Reinforced Silt Fence)**
T61	**Temporary Water Pollution Control Details (Temporary Drainage Inlet Protection)**
T62	**Temporary Water Pollution Control Details (Temporary Drainage Inlet Protection)**
T63	**Temporary Water Pollution Control Details (Temporary Drainage Inlet Protection)**
T64	**Temporary Water Pollution Control Details (Temporary Drainage Inlet Protection)**

BRIDGE DETAILS

B0-1	**Bridge Details**
B0-3	**Bridge Details**
B0-5	**Bridge Details**
B0-13	**Bridge Details**

RETAINING WALLS

RSP B3-4A	**Retaining Wall Type 5 (Case 1)**
B3-6	**Retaining Wall Details No. 2**

JOINT SEALS

B6-21	**Joint Seals (Maximum Movement Rating = 2")**

DECK DRAINS

B7-5	**Deck Drains**

CHAIN LINK RAILING, CABLE RAILING AND TUBULAR HAND RAILING

RSP B11-47	**Cable Railing**

BRIDGE CONCRETE BARRIERS

RSP B11-55	**Concrete Barrier Type 732**

COMMUNICATION AND SPRINKLER CONTROL CONDUITS (BRIDGE)

B14-3	**Communication and Sprinkler Control Conduits (Conduit Less Than 4")**

ROADSIDE SIGNS

RS1	**Roadside Signs, Typical Installation Details No. 1**
RS2	**Roadside Signs - Wood Post, Typical Installation Details No. 2**
RS3	**Roadside Signs - Laminated Wood Box Post Typical Installation Details No. 3**
RS4	**Roadside Signs, Typical Installation Details No. 4**

ELECTRICAL SYSTEMS - LEGEND AND ABBREVIATIONS

RSP ES-1A	**Electrical Systems (Legend and Abbreviations)**
RSP ES-1B	**Electrical Systems (Legend and Abbreviations)**
RSP ES-1C	**Electrical Systems (Legend and Abbreviations)**

ELECTRICAL SYSTEMS - LIGHTING STANDARDS

ES-6A	**Electrical Systems (Lighting Standard, Types 15 and 21)**
ES-6B	**Electrical Systems (Electrolier Anchorage and Grouting for Types 15 and 21, Barrier Rail Mounted)**

ELECTRICAL SYSTEMS - STRUCTURE INSTALLATIONS

ES-9A	**Electrical Systems (Structure Pull Box Installations)**
ES-9B	**Electrical Systems (Conduit Riser and Expansion Fitting, Structure Installations)**
ES-9C	**Electrical Systems (Structure Pull Box)**
ES-9D	**Electrical Systems (Structure Pull Box Installations)**
ES-9E	**Electrical Systems (Flush Soffit, Pendant soffit and Wall Luminaire, Structure Installations)**

THIS PAGE INTENTIONALLY LEFT BLANK

BID ITEM LIST

No.	P/F	Bid Item No.	Bid Item Description	Unit of Measure	Estimated Quantity
1		999990	MOBILIZATION	LS	1
2		051000	RAILROAD FLAGGING	DAYS	250
3		052000	TRACK SETTLEMENT MONITORING	LS	1
4		053000	BALLAST TAMPING	EA	2
5		066013	CONSTRUCTION STAKING	LS	1
6		066018	FURNISH FIELD OFFICE	LS	1
7		070030	LEAD COMPLIANCE PLAN	LS	1
8		080050	PROGRESS SCHEDULE (CRITICAL PATH METHOD)	LS	1
9		120000	PROJECT FUNDING SIGN	EA	2
10		120090	CONSTRUCTION AREA SIGNS	LS	1
11		120100	TRAFFIC CONTROL SYSTEM	LS	1
12		120110	FLASHING ARROW SIGN	EA	2
13		120120	TYPE III BARRICADE	EA	26
14		120149	TEMPORARY PAVEMENT MARKING (PAINT)	SQFT	1540
15		120159	TEMPORARY TRAFFIC STRIPE (PAINT)	LF	17100
16		120165	CHANNELIZER (SURFACE MOUNTED)	EA	450
17		128651	PORTABLE CHANGEABLE MESSAGE SIGN	EA	5
18		129000	TEMPORARY RAILING (TYPE K)	LF	5800
19		12XXXX	TEMPORARY ACCESS ROAD	LS	1
20		129110	TEMPORARY CRASH CUSHION	EA	10
21		130100	JOB SITE MANAGEMENT	LS	1
22		130300	PREPARE STORM WATER POLLUTION PREVENTION PLAN	LS	1
23		130330	STORM WATER ANNUAL REPORT	EA	3
24		130550	TEMPORARY HYDROSEED	SQYD	1280
25		130620	TEMPORARY DRAINAGE INLET PROTECTION	EA	16
26		130640	TEMPORARY FIBER ROLL	LF	4690

No.	P/F	Bid Item No.	Bid Item Description	Unit of Measure	Estimated Quantity
27		130680	TEMPORARY SILT FENCE	LF	2140
28		130710	TEMPORARY CONSTRUCTION ENTRANCE	EA	9
29		130730	STREET SWEEPING	LS	1
30		130900	TEMPORARY CONCRETE WASHOUT FACILITY	EA	2
31		141000	TEMPORARY FENCE (TYPE ESA)	LF	810
32		150203	ABANDON CULVERT (10")	EA	1
33		150204	ABANDON CULVERT (48" RCP)	LF	225
34		150608	REMOVE CHAIN LINK FENCE	LF	45
35		150662	REMOVE METAL BEAM GUARD RAILING	LF	522
36		150685	REMOVE IRRIGATION FACILITY	EA	1
37		150712	REMOVE PAINTED PAVEMENT MARKINGS	SQFT	820
38		150714	REMOVE THERMOPLASTIC TRAFFIC STRIPE	LF	14000
39		150722	REMOVE PAVEMENT MARKERS	EA	1770
40		150742	REMOVE ROADSIDE SIGN	EA	22
41		150749	REMOVE POST (METAL TUBULAR)	EA	2
42		150771	REMOVE ASPHALT CONCRETE DIKE	LF	1325
43		150812	REMOVE PIPE (10" SD)	LF	39
44		150812	REMOVE PIPE (12" SD)	LF	18
45		150812	REMOVE PIPE (24" RCP SD)	LF	73
46		150812	REMOVE PIPE (48" RCP SD)	LF	587
47		150820	REMOVE INLET	EA	4
48		150821	REMOVE CONCRETE HEADWALL	EA	4
49		150826	REMOVE STORM DRAIN MANHOLE	EA	4
50		150859	REMOVE ASPHALT CONCRETE OVERSIDE DRAIN	EA	3
51		150860	REMOVE BASE AND SURFACING	CY	1840
52		150880	REMOVE TEMPORARY DETOUR	LS	1

No.	P/F	Bid Item No.	Bid Item Description	Unit of Measure	Estimated Quantity
53		151540	RECONSTRUCT CHAIN LINK FENCE	LF	35
54		151XXX	RECONSTRUCT RAILING (METAL TUBULAR)	LF	260
55		151XXX	RECONSTRUCT SIGN	EA	2
56		152XXX	RELOCATE SURVEY MONUMENT	EA	8
57		152320	RESET ROADSIDE SIGN	EA	4
58		152370	RELOCATE MAILBOX	EA	1
59		152390	RELOCATE ROADSIDE SIGN	EA	9
60		152423	ADJUST SURVEY MONUMENT TO GRADE	EA	5
61		152438	ADJUST GAS VALVE TO GRADE	EA	1
62		152440	ADJUST STORM DRAIN MANHOLE TO GRADE	EA	3
63		152454	ADJUST PULL BOX	EA	1
64		153103	COLD PLANE ASPHALT CONCRETE PAVEMENT (0.17' MAXIMUM)	SQFT	17,500
65		153103D	COLD PLANE ASPHALT CONCRETE PAVEMENT (0.17' MAXIMUM) (DETOUR)	SQFT	4,840
66		153XXX	REMOVE CONCRETE (VALLEY GUTTER)	SQFT	2270
67		153XXX	REMOVE CONCRETE (MEDIAN PAVING)	SQFT	280
68		153130	REMOVE CONCRETE CURB	LF	910
69		153140	REMOVE CONCRETE SIDEWALK	SQYD	840
70		153215	REMOVE CONCRETE (CURB AND GUTTER)	LF	2180
71		153220	REMOVE CONCRETE (CHANNEL LINING)	CY	790
72		155232	SAND BACKFILL (48" RCP SD)	CY	105
73		156535	REMOVE RCB CULVERT	LF	163
74		156572	REMOVE RAILING (METAL, TUBULAR)	LF	360
75		156585	REMOVE CRASH CUSHION MODULE, SAND-FILLED	EA	1
76		157XXX	CONCRETE BRIDGE REMOVAL, HEINZ DRIVEWAY	LS	1
77		157XXX	TIMBER BRIDGE REMOVAL, WSID CANAL CROSSING	LS	1

No.	P/F	Bid Item No.	Bid Item Description	Unit of Measure	Estimated Quantity
78		157XXX	REMOVE BOLLARD	EA	12
79		157550	BRIDGE REMOVAL	LS	1
80		160102	CLEARING AND GRUBBING	LS	1
81		160120	REMOVE TREE	EA	13
82		190101	ROADWAY EXCAVATION	CY	7,700
83		190101D	ROADWAY EXCAVATION (DETOUR)	CY	1,380
84		190105	ROADWAY EXCAVATION (TYPE Z-2) (AERIALLY DEPOSITED LEAD)	CY	1,220
85		190139	ROADWAY EXCAVATION, REMOVE SILT (UNSUITABLE MATERIAL)	CY	2,450
86		190XXX	ROADWAY EXCAVATION, REMOVE DREDGED MATERIAL (UNSUITABLE MATERIAL)	CY	1,590
87	F	192037	STRUCTURE EXCAVATION (RETAINING WALL)	CY	1,822
88	F	193013	STRUCTURE BACKFILL (RETAINING WALL)	CY	1,268
89	F	193119	LEAN CONCRETE BACKFILL	CY	571
90		198010	IMPORTED BORROW	CY	49,100
91		198010D	IMPORTED BORROW (DETOUR)	CY	22,700
92	P	200XXX	LANDSCAPING PLANTING	LS	1
93		20XXXX	COBBLE PAVING	SQFT	10,066
94		20XXXX	BOULDERS	LS	1
95		205034	DECOMPOSED GRANITE (TAN)	SQFT	15,000
96	P	208000	IRRIGATION SYSTEM	LS	1
97		210350	FIBER ROLL	LF	3,510
98		210430	EROSION CONTROL (HYDROSEED)	SQYD	5,080
99		260203	CLASS 2 AGGREGATE BASE	CY	12,200
100		260203D	CLASS 2 AGGREGATE BASE (DETOUR)	CY	3,140
101		390132	HOT MIX ASPHALT (TYPE A)	TON	8,890
102		390132D	HOT MIX ASPHALT (TYPE A) (DETOUR)	TON	3,000

No.	P/F	Bid Item No.	Bid Item Description	Unit of Measure	Estimated Quantity
103	P	393004	GEOSYNTHETIC PAVEMENT INTERLAYER (PAVING FABRIC)	SQFT	121,000
104		394073	PLACE HOT MIX ASPHALT DIKE (TYPE A)	LF	38
105		394073D	PLACE HOT MIX ASPHALT DIKE (TYPE A) (DETOUR)	LF	62
106	P-F	477020	MECHANICALLY STABILIZED EMBANKMENT	SQFT	82,177
107		477XXX	TEMPORARY RETAINING WALL (DETOUR)	LS	1
108	P	480700	FURNISH TEMPORARY PREFABRICATED MODULAR STEEL TRUSS BRIDGE	EA	1
109		480800	ERECT TEMPORARY PREFABRICATED MODULAR STEEL TRUSS BRIDGE	EA	1
110	P	490595	108" PERMANENT STEEL CASING	LF	340
111		490606	42" CAST-IN-DRILLED-HOLE CONCRETE PILING (DETOUR)	LF	510
112		490618	96" CAST-IN-DRILLED-HOLE CONCRETE PILING	LF	2,400
113	P	500010	PRESTRESSING	LS	1
114	F	510053	STRUCTURAL CONCRETE (BRIDGE)	CY	4,836
115	F	510053D	STRUCTURAL CONCRETE (BRIDGE) (DETOUR)	CY	124
116	F	510060	STRUCTURAL CONCRETE, RETAINING WALL	CY	394
117	F	510072	STRUCTURAL CONCRETE (BARRIER SLAB)	CY	1,027
118	F	510080	STRUCTURAL CONCRETE, APPROACH SLAB	CY	491
119	F	510080D	STRUCTURAL CONCRETE, APPROACH SLAB (DETOUR)	CY	54
120	F	510502	MINOR CONCRETE (OUTFALL STRUCTURE)	EA	2
121	F	510503	LATERAL SIDE CONNECTION	EA	3
122	F	510504	CAST-IN-PLACE CONCRETE COLLAR	EA	7
123	F	510505	72" X 96" STORM DRAIN JUNCTION STRUCTURE	EA	1
124	F	510506	72" X 240" STORM DRAIN JUNCTION STRUCTURE	EA	1
125	F	510507	84" X 144" STORM DRAIN JUNCTION STRUCTURE	EA	1

No.	P/F	Bid Item No.	Bid Item Description	Unit of Measure	Estimated Quantity
126	F	511035	ARCHITECTURAL TREATMENT (BRIDGE)	SQFT	3,975
127	F	511035	ARCHITECTURAL TREATMENT (RETAINING WALL)	SQFT	82,177
128	P	512204	FURNISH PRECAST PRESTRESSED CONCRETE GIRDER (50'-60')	EA	20
129	P	512205	FURNISH PRECAST/PRESTRESSED CONCRETE GIRDER (60'-70')	EA	40
130	F	512500	ERECT PRECAST PRESTRESSED CONCRETE GIRDER	EA	60
131	P	519100	JOINT SEAL (MR 2")	LF	604
132	P-F	520102	BAR REINFORCING STEEL (BRIDGE)	LB	2,214,596
133	P-F	520102D	BAR REINFORCING STEEL (BRIDGE) (DETOUR)	LB	72,500
134	P-F	520103	BAR REINFORCING STEEL (RETAINING WALL)	LB	44,802
135	P-F	520120	HEADED BAR REINFORCEMENT	EA	320
136		560300	LINCOLN HIGHWAY HISTORIC SIGN	EA	2
137		566011	ROADSIDE SIGN	EA	19
138	P	650010	12" REINFORCED CONCRETE PIPE	LF	54
139	P	650014	18" REINFORCED CONCRETE PIPE	LF	408
140	P	650018	24" REINFORCED CONCRETE PIPE	LF	21
141	P	650022	30" REINFORCED CONCRETE PIPE	LF	77
142	P	650026	36" REINFORCED CONCRETE PIPE	LF	209
143	P	650034	48" REINFORCED CONCRETE PIPE	LF	1,754
144	P	650042	60" REINFORCED CONCRETE PIPE	LF	160
145	P	650305	10" REINFORCED CONCRETE PIPE (CLASS III)	LF	97
146		685200	DRAINAGE WICK	LF	168,400
147		685200D	DRAINAGE WICK (DETOUR)	LF	16,600
148		707241	STORM DRAIN MANHOLE (72")	EA	5
149		7072XX	STORM DRAIN MANHOLE (84")	EA	2

No.	P/F	Bid Item No.	Bid Item Description	Unit of Measure	Estimated Quantity
150		7072XX	STORM DRAIN MANHOLE (96")	EA	3
151		707XXX	DROP INLET (48" OPENING)	EA	4
152		707XXX	DROP INLET (30" OPENING)	EA	9
153		707XXX	AREA DRAIN	EA	1
154		707XXX	DROP INLET (TYPE G1)	EA	1
155		707XXX	DROP INLET (TYPE G2 MODIFIED)	EA	1
156		710100	TEMPORARY DETOUR DRAINAGE	LS	1
157	F	721017	ROCK SLOPE PROTECTION (FACING, METHOD B)	CY	107
158	F	721019	ROCK SLOPE PROTECTION (BACKING NO. 3, METHOD B)	CY	68
159		721430	MINOR CONCRETE (CHANNEL LINING)	CY	86
160		721810	SLOPE PAVING (CONCRETE)	CY	104
161		73XXXX	MINOR CONCRETE (COPING TYPE A)	CY	46
162		73XXXX	MINOR CONCRETE (COPING TYPE B)	CY	117
163		73XXXX	MINOR CONCRETE (CONCRETE UTILITY CAP)	CY	13
164		730010	MINOR CONCRETE (RETAINING CURB)	LF	320
165		730020	MINOR CONCRETE (CURB)	CY	85
166		730045	MINOR CONCRETE (VALLEY GUTTER)	CY	120
167		730070	DETECTABLE WARNING SURFACE	SQFT	205
168		731504	MINOR CONCRETE (CURB AND GUTTER)	CY	210
169		731509	MINOR CONCRETE (CONCRETE MOW STRIP)	LF	2,200
170		731511	MINOR CONCRETE (ISLAND PAVING)	CY	140
171		731516	MINOR CONCRETE (DRIVEWAY)	CY	58
172		731521	MINOR CONCRETE (SIDEWALK)	CY	360
173		731623	MINOR CONCRETE (CURB RAMP)	CY	21
174		7316XX	MINOR CONCRETE (MEDIAN)	CY	38

No.	P/F	Bid Item No.	Bid Item Description	Unit of Measure	Estimated Quantity
175		733040	MINOR CONCRETE (GUTTER)	LF	1,295
176	P-F	750041	ISOLATION CASING	LB	49,611
177	P-F	750501	MISCELLANEOUS METAL (BRIDGE)	LB	18,762
178	P-F	750501D	MISCELLANEOUS METAL (BRIDGE) (DETOUR)	LB	182
179	P-F	750505	BRIDGE DECK DRAINAGE SYSTEM	LB	1,749
180	P	770100	SEWER LINE MODIFICATIONS	LS	1
181	P	770200	WATER LINE MODIFICATIONS	LS	1
182		800103	TEMPORARY FENCE (TYPE CL-6)	LF	5,050
183	P	800320	CHAIN LINK FENCE (TYPE CL-4)	LF	5
184		820131	OBJECT MARKER (TYPE K)	EA	3
185		820134	OBJECT MARKER (TYPE P)	EA	2
186	P-F	833XXX	METAL RAILING	LF	2,663
187	P-F	833XXX	CHAIN LINK RAILING (TYPE 6 MODIFIED)	LF	622
188	P	839XXX	CRASH CUSHION (QUADGUARD II)	EA	2
189	P-F	839521	CABLE RAILING	LF	1,514
190	F	839717	CONCRETE BARRIER (TYPE 732 MODIFIED)	LF	760
191	F	839723A	CONCRETE BARRIER (TYPE 732B MODIFIED)	LF	2,728
192	F	839800	CONCRETE BARRIER (PEDESTRIAN)	LF	3,507
193	P-F	839801	REMOVABLE RAILING	LF	456
194	P-F	839802	PEDESTRIAN RAILING (DETOUR)	LF	1,012
195	P-F	839803	PROTECTIVE RAILING (DETOUR)	LF	1,007
196		839804	COLLAPSIBLE BOLLARD	EA	3
197		840501	THERMOPLASTIC TRAFFIC STRIPE	LF	23,200
198		840515	THERMOPLASTIC PAVEMENT MARKING	SQFT	1,540
199		840656	PAINT TRAFFIC STRIPE (2-COAT)	LF	20,600
200	P	850111	PAVEMENT MARKER (RETROREFLECTIVE)	EA	220

No.	P/F	Bid Item No.	Bid Item Description	Unit of Measure	Estimated Quantity
201	P	860150	TRAFFIC SIGNAL STAGE CONSTRUCTION	LS	1
202	P	860300	TRAFFIC SIGNAL AND LIGHTING (11TH ST & N. MACARTHUR DR)	LS	1
203	P	860401	UNDERPASS LIGHTING SYSTEM	LS	1
204	P	860402	STREET AND BRIDGE LIGHTING SYSTEM	LS	1
205		860705	SIGNAL INTERCONNECT	LS	1
206		960000	PORCELAIN ENAMEL SIGN	EA	36
207		970000	BRONZE PLAQUE	EA	1
208	F	994000	ENTRY MONUMENT STRUCTURE	EA	4

THIS PAGE INTENTIONALLY LEFT BLANK

DIVISION I GENERAL PROVISIONS

1 GENERAL

Add to section 1-1.01:

Bid Items and Applicable Sections

Item code	Item description	Applicable section
066013	CONSTRUCTION STAKING	5
066018	FURNISH FIELD OFFICE	10
999990	MOBILIZATION	9

Add or Replace the following definitions in section 1-1.07B with:

Agency: The legal entity for which the work is being performed.

Bid Book: The Proposal and Contract.

City Council: The City Council of the City of Tracy, State of California is the governing board for the agency having jurisdiction over the work being done under this contract.

City: City of Tracy, a political subdivision of the State of California. The agency having jurisdiction over the work being done under this contract.

Department, Department of Transportation, Director, Director of Transportation: The City Council of the City of Tracy, State of California.

Deputy Director Transportation Engineering, or Engineer: The Development Services Department Director of City of Tracy, State of California, acting either directly or through properly authorized agents, such agents acting within the scope of the particular duties entrusted to them.

Laboratory: The Materials and Testing Laboratory of the City of Tracy or Laboratories authorized by the Engineer to test materials and work involved in the contract.

Notice to Bidders: The Notice to Contractors.

State: "Agency" as defined above.

State Highway Engineer: The Development Services Department Director, City of Tracy, State of California.

Transportation Building, Sacramento: Engineering Services Building, 333 Civic Drive, Tracy, California.

^^

2 BIDDING

Add to Section 2-1.06A:

Revised Standard Specifications are available at State of California, Department of Transportation (Caltrans) website at: http://www.dot.ca.gov/hq/esc/oe/construction_contract_standards/SSPs/2010-SSPs/_rss/RSS_A01-23-15.docx

Contractor must comply with the most recent revised state standard specifications available prior to bid opening.

Add to section 2-1.06B:

The Department makes the following supplemental project information available:

Supplemental Project Information

Means	Description
Included in Information Handout	A. Construction Cross Sections B. 11th Street East Tracy OH Bridge as-built drawings C. Phase I Initial Site Assessment, dated January 2011 D. Deteriorated Lead Paint Survey, dated February 2006 E. Preliminary Site Investigation Report, dated November 2012 F. 11th Street East Tracy OH Bridge as-built drawings, West Yost Hydraulic Water System Analysis Memorandum dated March 28, 2012 G. Traffic Analysis Memorandum, dated October 21, 2010

^^

5 CONTROL OF WORK

Replace Section 5-1.02 with:

5-1.02 CONTRACT COMPONENTS

A component in one Contract part applies as if appearing in each. The parts are complementary and describe and provide for a complete work.
If a discrepancy exists:

1. The governing ranking of Contract parts in descending order is:
   1.1. Change Orders
   1.2. Project Directives
   1.3. Permits
   1.4. Agreement and Required Forms
   1.5. Special provisions/Project specifications
   1.6. Project plans and drawings
   1.7. Revised state standard specifications
   1.8. State standard specifications, excepting Utility Work which shall be governed by the City Standard Specifications and Plans
   1.9. City standard specifications
   1.10. Revised state standard plans
   1.11. State Standard plans
   1.12. City Standard Plans and City Parks and Streetscape Standard Plans.

1.13. Reference Specifications and Plans
1.14. Supplemental project information

2. Written numbers and notes on a drawing govern over graphics
3. A detail drawing governs over a general drawing
4. A detail specification governs over a general specification
5. A specification in a section governs over a specification referenced by that section

In the case of discrepancy between the plans/standard details and the County's "Special Conditions", the County's "Special Conditions" shall govern within County right-of-way.

If a discrepancy is found or confusion arises, submit an RFI.

Add to section 5-1.09A:

The Department encourages the project team to exhaust the use of partnering in dispute resolution before engagement of an objective third party.

For certain disputes, a facilitated partnering session or facilitated dispute resolution session may be appropriate and effective in clarifying issues and resolving all or part of a dispute.

To afford the project team enough time to plan and hold the session, a maximum of 20 days may be added to the DRB referral time following the Engineer's response to a *Supplemental Potential Claim Record.*

To allow this additional referral time, the project team must document its agreement and intention in the dispute resolution plan of the partnering charter. The team may further document agreement of any associated criteria to be met for use of the additional referral time.

If the session is not held, the DRB referral time remains in effect as specified in section 5-1.43.

Add to section 5-1.20A:

During the progress of the work under this Contract, work under the following contracts may be in progress at or near the job site of this Contract:

Coincident or Adjacent Contracts

Contract no.	County–Route–Post Mile	City	Type of work
11th Street and MacArthur Drive Intersection Improvements Project	SJ-0-NA	Tracy, CA	Intersection Improvements

Replace the 1st sentence of section 5-1.20B (1) with:

Comply with PLACs. Your work will be performed in compliance with the most restrictive condition of the PLACs. The Department makes PLAC changes under section 4-1.05. Maintain a copy of each PLAC at the job site. The following are PLACS contained in Appendix C:

1. Categorical Exemption/Categorical Exclusion Determination Form for BHLS-5192(020) dated 4/12/2011.
2. Environmental Avoidance and Minimization Measures.
3. California Department of Fish and Wildlife (CDFW), Final Streambed Alteration Agreement Notification # 1600-2014-0173-R3 dated October 8, 2014.
4. Record of Conversation with Robert Stanley of the CDFW dated September 16, 2014.
5. San Joaquin Valley Air Pollution Control District memo to Zabih Zaca dated October 6, 2011.
6. US Fish and Wildlife Service Concurrence Letter # 81420-2011-I-0291-1

7. Encroachment Permit from Caltrans for Portable Changeable Message Signs dated November 17, 2014.
8. Preliminary Jurisdictional Determination Form dated September 20, 2012.
9. San Joaquin County Special Conditions for Encroachment Permit, dated January 9, 2015.

Replace "Reserved" in section 5-1.20C of the State Standard Specifications with:

5-1.20C Railroad Relations

For these Special Provisions, the term “Railroad” shall be understood to mean the Union Pacific Railroad Company.

Refer to and comply with Union Pacific Railroad’s New Public Highway Overcrossing Agreement and the General Order 88-B Permit from the Public Utilities Commission for this project.

You must notify Peggy J. Ygbuhay, the UPRR Manager Industry and Public Projects, 9451 Atkinson Street, Roseville, CA 95747, telephone 916-789-5152, fax 402-223-3115 a minimum of thirty (30) working days prior to any work on, or adjacent to the property or tracks of the Railroad, and a minimum of ten (10) working days in advance of any work or equipment within 25 feet of any track.

The project lies within a remote control switching yard thus there will be train cars sitting on the tracks at all times. For the two easternmost tracks beneath the bridge, UPRR operators use control panels they carry with them to move trains back and forth throughout the day, Monday through Saturday 6am to 6 pm.

The westernmost track is the mainline and the number and time of day the trains pass through the project site per day vary, but typically there are six “through” trains per day. There is one train that passes through per night, but UPRR can adjust the schedule of this train at its discretion.

This Contract includes an agreement with UPRR, attached in the Appendices of these Special Provisions. Comply with the requirements in the document.

It is expected that Railroad will cooperate with the Contractor to the end that the work may be handled in an efficient manner, but the Contactor will have no claim for damages or extra compensation in the event his work is held up by the work of the Railroad forces, but additional working days will be warranted if the controlling item of work is deemed to be delayed by UPRR forces.

The Contractor will cooperate with the Railroad where work is over or under the tracks, or within the limits of Railroad property, in order to expedite the work and to avoid interference with the operations of railroad equipment.

The Contractor will give the advance notice to the Railroad that is required in the Contractor’s Right of Entry Agreement before commencing any work on Railroad property. The cost of Railroad required flagging, as defined in Exhibit C of the Crossing Agreement, is estimated at $1,300 per 8 hour day. For bidding purposes, the Contractor must assume a flagman will be required for 250 days for a total cost of $325,000. The cost must be borne entirely by the Contractor for up to 250 days. Any increase in flagging days during construction will be adjusted through a change order and must be borne equally by the City and the Contractor.

Working drawings showing details of construction affecting the Railroad tracks and property not included in the contract plans, to include but not be limited to bridge removal plan, falsework and shoring, must be submitted to the Engineer for approval before such work is undertaken. Falsework and shoring must be designed in accordance with the requirements of the latest version of the State of California, Department of Transportation, “Falsework Manual” and “Trenching and Shoring Manual” and all pertinent Railroad Manuals. In addition, the structural calculations and preparation of plans and specifications for bridge removal plan, falsework and shoring must be prepared by a Professional Engineer Registered in California with a minimum of 5 years of experience specializing in bridge removal over railroad tracks, the design of shoring subjected to railroad live loading, or falsework adjacent or over live railroad tracks.

The Contractor, upon completion of the work covered by this contract, must promptly remove from the premises of Railroad all of Contractor's tools, implements and other materials, whether brought upon said premises by said Contractor of any Subcontractor, employee or agent of Contractor or of any Subcontractor, and cause said premises to be left in a clean and presentable condition.

The Contractor must understand the Contractor's right to enter the Railroad's property is subject to the absolute right of the Railroad to cause the Contractor's work on the Railroad's property to cease if, in the opinion of the Railroad, the Contractor's activities create a hazard to the Railroad's property, employees, or operations.

All construction and phasing work must not affect the Railroad operations. All construction and phasing work within the Railroad property must take place with the windows of time to be provided by the local operating unit of the Railroad.

Temporary Track Crossing(s)
Temporary crossings will not be permitted by UPRR.

Night Work
UPRR can allow an 8 to 10 hour work window at nights and on weekends at their discretion. All required work for splice tower erection, girder erection, splice tower removal, temporary steel truss bridge erection, temporary steel truss bridge removal, and existing bridge demolition, within 25 ft. and over the UPRR tracks shall be limited to night and weekend work.

5-1.20C (1) Coordination with UPRR

UPRR REQUIREMENTS

The Contractor acknowledges its receipt from the CITY of a copy of the "New Public Highway Overpass Crossing Agreement" (Crossing Agreement) that has been executed by the Railroad and the CITY and is included in the Appendices. The Contractor agrees to execute and deliver the Contractor's Right of Entry Agreement that is included in Exhibit E of the New Public Highway Overpass Crossing Agreement and to provide to the CITY and/or the Railroad all insurance policies, binders, certificates or endorsements that are set forth in Exhibit E of the Contractor's Right of Entry Agreement before commencing any work on Railroad property.

The Contractor must cooperate with the UPRR where work is over or under the tracks, or within the limits of UPRR property, in order to expedite the work and to avoid interference with the operation of railroad equipment.

The Contractor must comply with the rules and regulations of the UPRR or the instructions of its representatives in relation to the proper manner of protecting the tracks and property of the UPRR and the traffic moving on such tracks, as well as the wires, signals, and other property of the UPRR, its tenants or licensees, at and in the vicinity of the work during the period of construction.

The Contractor must perform the work in such manner and at such times as shall not endanger or interfere with the safe operation of the tracks and property of the UPRR and the traffic moving on such tracks, as well as wires, signals, and other property of the UPRR, its tenants or licensees, at and in the vicinity of the work.

The Contractor must take protective measures necessary to keep UPRR facilities, including track ballast, free of sand or debris resulting from the construction operations. Any damage to UPRR facilities resulting from the Contractor's operations will be repaired or replaced by the UPRR and the cost of such repairs or replacements shall be deducted from the Contractor's progress and final pay estimates.

The Contractor must contact UPRR 'Call Before You Dig' at least 48 hours prior to commencing work at 1-800-336-9193 to determine the location of underground utilities on or near the UPRR property. If there is a system, the Contractor will telephone the owner of the system designated, arrange for a cable or utility locator, and make arrangements for relocation or other protection of the system prior to beginning any work on or near the UPRR property.

The Contractor must not pile or store any materials nor park any equipment or vehicles closer than 25'-0" to the centerline of the nearest track, unless directed by the UPRR's representative.

The Contractor must also abide by the following UPRR temporary clearances during the course of construction:

- 12'-0" horizontally from centerline of track, unless otherwise indicated on the plans or as directed by the UPRR's representative.
- 21'-0" vertically above top of rail

Parallel to the outer side of each exterior track of multiple operated track, and on each side of single operated track, an unobstructed continuous space suitable for trainman's use in walking along trains, extending in width not less than twelve feet (12') perpendicular from centerline of track, shall be maintained. Any temporary impediments to walkways and track drainage encroachments or obstructions allowed during working hours must be covered, guarded and/or protected as soon as practical. Walkways with railings shall be constructed by the Contractor over open excavation areas when in close proximity of track, and railings shall not be closer than 9' perpendicular from the center line of tangent track or 9'-6" horizontal from curved track.

Any infringement on the above temporary construction clearances due to the Contractor's operations must be submitted to UPRR by way of the Engineer, and must not be undertaken until authorized by the UPRR, and until the Engineer has obtained any necessary authorization from any governmental body or bodies having jurisdiction thereover. No extension of time or extra compensation will be allowed in the event the Contractor's work is delayed pending UPRR approval and governmental authorization.

When the temporary vertical clearance is less than 22'-6" above the top of rail, the UPRR must have the option of installing tell-tales or other protective devices that the UPRR deems necessary for protection of the UPRR personnel, equipment, or operations.

Three sets of shop drawings, calculations, and other documentation, authorized by the Engineer, showing the details of bridge removal and construction affecting the UPRR's tracks, operations, and property must be submitted to UPRR for approval. Falsework, bracing, and temporary supports must comply with UPRR guidelines. Excavation shoring must be designed in accordance with UPRR's Shoring Requirements (Drawing No. 106613) and UPRR guidelines. Shop drawings, calculations, and other documentation must be prepared and signed by a registered professional engineer in the State of California. The work must not be undertaken until such time as UPRR has given such approval. After acceptance by the Engineer, UPRR may take up to six (6) weeks after receipt of all necessary information to complete their review. At minimum, the following submittals must be provided to UPRR for review and approval:

- Temporary Bridge Erection Plan
- Bridge Removal Plan
- Construction sequence plan for the Main Bridge. This plan must include detailed plans for protecting the UPRR track, rails, ties, and ballast for any operations with the UPRR property.
- Temporary support, bracing, and falsework design for the Main Bridge
- Other submittals outlined in UPRR's Agreement, current standards, and Policy Manuals.

The Contractor must notify the Engineer, in writing, at least 25 calendar days but not more than 40 calendar days in advance of the starting date of installing temporary work with less than permanent clearance. The Contractor will not be permitted to proceed with work across the UPRR tracks unless this requirement has been met. No extension of time or extra compensation will be allowed in the event the Contractor's work is delayed because of failure to comply with the requirements in this paragraph.

The contractor must schedule and plan for all UPRR reviews and approvals. All temporary supports, falsework, bridge placement, bridge removal plan and shoring plans will need to be reviewed and authorized by UPRR. After acceptance by the Engineer, UPRR may take up to six (6) weeks after receipt of all the necessary information to review and approve the drawings.

All under track pipeline installations must be constructed in accordance with the UPRR's current standards which may be obtained from the UPRR. The general guidelines are as follows:

- Edges of jacking or boring pit excavations must be kept a minimum of 20 feet from the centerline of the nearest track.
- If the pipe to be installed under the track is four (4) inches in diameter or less, the top of the pipe must be at least 42 inches below the base of the rail.
- If the pipe diameter is greater than four (inches), it must be encased and the top of the steel pipe casing must be at least 66 inches below base of rail.
- Installation of any pipe or conduit under the UPRR's tracks is to be done by dry bore and jack method.
- No hydraulic jacking or boring will be permitted.
- Care is to be exercised so as not to damage any underground facilities of the UPRR.

PROTECTION OF UPRR FACILITIES

Upon advance notification of not less than 30 working days by the Contractor, UPRR representatives or flaggers will be provided by UPRR to protect its facilities, property, and movements of its trains or engines. In general, UPRR will furnish such personnel or other protective devices:

a. When any part of any equipment is standing or being operated within 25 feet, measured horizontally, from the centerline of any track on which trains may operate, or when any erection or construction activities are in progress, or can extend within such limits, regardless of elevation above or below track.
b. Where the Contractor's equipment, crane booms, or jibs could, through overturning or falling, accidentally enter into the UPRR's property.
c. When construction is conducted above UPRR's tracks. Flaggers will not be required when construction is conducted above UPRR's tracks after the walls/fence are constructed and secured in place and all work is being done on the bridge deck within the confines of the walls/fence.
d. For any excavation below elevation of track subgrade if, in the opinion of the UPRR's representative, track or other facilities may be subject to settlement or movement.
e. During any clearing, grubbing, or grading, or blasting in proximity to UPRR which, in the opinion of UPRR's representative, may endanger UPRR facilities or operations.
f. During any of the Contractor's operations when, in the opinion of the UPRR's representatives, UPRR's facilities, including, but not limited to, tracks, buildings, signals, wire lines or pipe lines, may be endangered.

UPRR PROTECTIVE INSURANCE

In addition to any other form of insurance or bonds required under the terms of the contract and specifications, the Contractor will be required to carry insurance of the kinds and in the amounts hereinafter specified.

Such insurance must be accepted by the UPRR before any work is performed on UPRR's property and must be carried until all work required to be performed on or adjacent to the UPRR's property under the terms of the contract is satisfactorily completed as determined by the Engineer, and thereafter until all tools, equipment, and materials have been removed from UPRR's property and such property is left in a clean and presentable condition.

The insurance herein required must be obtained by the successful bidder and he must furnish the City with two completed certificates, signed by the insurance company or its authorized agent or authorized agent or representative, reflecting the existence of each of the policies required 1 and 2 below including coverage for X, C, and U and completed operations hazards, the original policy of insurance and one certified copy thereof required by 3 below, the City will convey one of the certificates of policy certifying 1 and 2 and the original policy of insurance required by 3 to UPRR upon receipt from successful bidder. The City will notify successful bidder whether UPRR approves the insurance policies.

Certificate of insurance must guarantee that the policy under 1 and 2 will not be amended, altered, modified or canceled insofar as the coverage contemplated hereunder is concerned, without at least thirty (30) days' notice mailed by registered mail to the Engineer and the UPRR.

Full compensation for all premiums which the Contractor is required to pay on all insurance described hereinafter must be considered as included in the prices paid for the various items of work to be performed under the contract, and no additional allowance will be made therefore or for additional premiums which may be extensions of policies of insurance.

1. **Contractor's Public Liability and Property**

   Damage Liability Insurance

The Contractor must, which respect to the operations he performs within or adjacent to UPRRs property, carry regular Contractor's Public Liability and Property Damage Liability Insurance providing for the name limits as specified for UPRR's Protective Public Liability and Property Damage Liability insurance to be furnished for and in behalf of UPRR as hereinafter provided.

If any part of the work within or adjacent to UPRR's property is subcontracted, the Contractor in addition to carrying the above insurance must provide the above insurance on behalf of the subcontractors to cover their operations.

2. **Contractor's Protective Public Liability and Property**

   Damage Liability Insurance

The Contractor must, with respect to the operations performed for him by subcontractors who do work within or adjacent to UPRR's property, carry in his own behalf regular Contractor's Protective Public Liability and Property Damage Liability Insurance to be furnished for and on behalf of UPRR and hereinafter provided.

3. **UPRR's Protective Public Liability and Property**

   Damage Liability Insurance

The Contractor must, with respect to the operations he performs within or adjacent to UPRR's property or that of any of this subcontractors who do work within or adjacent to UPRR's property perform, have issued and furnished in favor of UPRR, Policy or policies of insurance in the UPRR Protective Liability Form as hereinafter specified.

CONFLICT BETWEEN RAILROAD'S AGREEMENT WITH THE CITY OR RAILROAD POLICIES AND PROCEDURES AND THESE SPECIAL PROVISIONS

In the event of a conflict between this Special Provision and the Railroad's Requirements stated in the agreement between the Railroad and the City, the Agreement will take precedent.

Replace section 5-1.20D with:

5-1.20D Fugitive Dust Permit (PM10)

5-1.26A General

Obtain a Fugitive Dust (PM10) Permit and pay all fees from the San Joaquin Valley Air Pollution Control District (SJVAPCD).

Replace section 5-1.26 with:

5-1.26 CONSTRUCTION SURVEYS

5-1.26A General

5-1.26A (1) Summary

Section 5-1.26 includes specifications for furnishing and setting construction stakes and markers to establish the lines and grades required for the completion on the work and as necessary for the Engineer to check lines, grades, alignment and elevations.

You must perform and coordinate construction staking as necessary to control the work and maintain a complete and accurate log of control and survey work as it progresses. You must establish and maintain baselines and field control points as required and furnish and set construction stakes and marks with accuracy adequate to assure that the completed work conforms to the lines, grades, and section. Vertical alignment and the coordinates of centerlines and layout lines will be furnished to you at the pre-construction conference for use in in performing the construction staking.

The Survey Plan, surveying calculations, survey notes, and other records submitted to establish the exact position of the work must be completed under the direction of and signed by a Professional Land Surveyor who is registered in the State of California.

5-1.26A (2) Definitions

You must follow all procedures, methods, and typical stake markings under Chapter 12, Construction Surveys, of the Caltrans publication "Surveys Manual." Copies of the "Survey Manual" may be purchased from Caltrans Publications Unit 1900 Royal Oaks Drive, Sacramento, California 95815, (916) 445-3520.

5-1.26A (3) Submittals

You must submit all computations necessary to establish the exact position of the work from control points. All computations, survey notes, and other records necessary to accomplish the work must be neat, legible, and accurate. Copies of such computation, notes and other records must be furnished to the Engineer prior to beginning work that requires their use. Upon completion of construction staking and prior to acceptance of the contract, all computations, survey notes, and other data used to accomplish the work must be submitted to the Engineer and will become the property of the City.

Before starting any surveying work, you must submit the name and professional history of the land surveyor designated by you as its project surveyor. At a minimum, the project surveyor must have five to ten years of verifiable experience performing field survey of bridge and road alignments. Additionally, a written survey plan must be submitted for acceptance detailing the proposed procedures, methods, equipment, and typical stake marking to be used for the project.

The Survey Plan must include working drawings and supplements and at a minimum, the following:

1. Location of all survey points
2. Permanent and Detour alignments
3. Grade sheet formats

The supplements to the working drawing must show your proposed methods of construction surveying and a quality control plan for surveying, and must include the following:

1. A listing of the types of methods and related items to be constructed.
2. Detailed calculation forms, and a set of calculation for each type of survey method, including sample input and output of computer programs.
3. Identifications of all measuring equipment, procedures.
4. Qualifications of personnel who will perform the construction surveying, and for the Professional Land Surveyor of record.

Prior to submitting the Survey Plan, you and Professional Land Surveyor must hold a pre-survey meeting to discuss the proposed bridge and retaining wall construction surveying procedures. The pre-survey meeting must include but not limited to the following topics:

1. MSE and Retaining Walls (Temporary and Permanent)
2. CIDH Piles
3. Abutments
4. Splice Towers
5. Bridge Overhang and Deck Finished Grades
6. Temporary Bridge
7. Bridge Rails

You must allow 15 days for review of the Survey Plan after the complete plan has been submitted. If revisions are required, you must revise and resubmit the Survey Plan. You must allow 10 days to review the revisions. Bridge construction surveying must not begin until receiving authorization.

5-1.26A (4) Quality Control and Assurance

You must submit a detailed narrative of the step-by-step surveying control process.
You must immediately notify the Engineer of any discrepancies discovered.

5-1.26B MATERIALS

Not used.

5-1.26C CONSTRUCTION

Construction stakes and marks (including paint marks) must be removed from the site of work when no longer needed.

You are responsible for generating the grades for the bridge, all retaining walls, temporary bridge and temporary retaining walls required for the completion of this work. You must submit the grades, according to the approved grade sheet format within a reasonable length of time prior to its use. In no event, will a submittal of less than 10 working days be considered a reasonable length of time.

You are responsible for the preservation of all Survey Monuments within the project limits. Within 30 days of award and prior to disturbing any Survey Monuments, all Survey Monuments that potentially may be disturbed by construction activity must be located and referenced by a Licensed Land Surveyor, and a Corner Record or Record of Survey filed with the County Surveyor. Any Survey Monuments disturbed during the course of construction must be reestablished by a Licensed Land Surveyor, a new monument set, and another Corner Record or Record of Survey filed with the County Surveyor. (Land Surveyors' Act Section 8771).

5-1.26D PAYMENT

The Department pays you for construction staking as follows:
1. A total of 90 percent of the item total over the life of the contract
2. A total of 100 percent of the item upon submission of final computations, notes and other data.

Add to section 5-1.36D:

Installation of the utilities shown in the following table requires coordination with your activities. Make the necessary arrangements with the utility company through the Engineer, provide unfettered access to the utility companies, and submit a schedule:

1. Verified by a representative of the utility company
2. Allowing at least the time shown for the utility owner to complete its work

Utility Relocation and Contractor-Arranged Time for the Relocation

Utility	Utility Contact & Address	Location/Description of Work	Calendar Days of Notification	Working Days to Complete
PG&E – Electric	Pratibha Nigam Pacific Gas & Electric 4040 West Lane Stockton, CA 95204	Boring and jacking casing underneath the railroad tracks south of 11th Street and north of temporary detour; placing and activating the rest of the facilities in joint trench located south of 11th Street; and removing overhead lines and poles for facilities that currently run parallel to 11th Street Bridge on both the north and south side	30	60
PG&E – Gas	Pratibha Nigam Pacific Gas & Electric 4040 West Lane Stockton, CA 95204	Boring and jacking casing underneath the railroad tracks south of 11th Street and north of temporary detour; placing the rest of the gas line in joint trench located south of 11th Street and activating line; connecting service lines to the new gas line placed south of 11th Street; and deactivating the existing gas line that crosses below 11th Street Bridge and then runs parallel to and on the south side of 11th Street	30	60
PG&E – Gas	Pratibha Nigam Pacific Gas & Electric 4040 West Lane Stockton, CA 95204	Relocate the existing gas line attached to the culvert headwall at the 11th street/MacArthur intersection adjacent to the UPRR railroad tracks. PG&E anticipates placing the gas line beneath the WSID pipe at this location prior to the contractor piping the canal.	30	15

Before starting work that could damage or interfere with the existing Sprint fiber optic line, submit plan for protecting line in place. You may not begin any work that may damage the existing line until the protection plan submittal is authorized by the Engineer.

Attention is directed to the existence of two existing drainage pipes located near station 36+25 crossing under 11th Street, Retaining Wall No. 4 and Retaining Wall No. 6. You must positively locate these pipes before performing any excavation work for the retaining walls and placing fill slopes. You must video inspect these pipe prior to construction and will provide this information to the Engineer. Upon completion of Retaining Walls and fill slopes, you must video inspect these pipes and provide this information to the Engineer. Payment for video inspecting the pipes and providing the information to the Engineer is included in the various items of work required to construct the project.

Replace section 5-1.40 with:

5-1.40 Settlement Monitoring for Embankments

5-1.40 General

5-1.40A Summary

Section 5-1.40 includes specifications for furnishing, installing, and monitoring settlement platforms to monitor both temporary and permanent bridge embankments. The Contractor is responsible for surveying the elevations of the surface control points in accordance with the requirements herein.

5-1.40B Definitions

Not used

5-1.40C Submittals

Qualified Contractor personnel must monitor and record the amount of settlement once every week until the settlement has reached an acceptable tolerance as allowed by the Engineer. A copy of all the readings must be furnished to the Engineer no more than two days after each reading.

5-1.40D Quality Control and Assurance

Surveying for settlement monitoring instrumentation must be referenced to the same control points and benchmarks established for constructing the project. Control points must be located a minimum of 100-feet beyond all retaining wall limits and outside of the zone of influence of any excavation or construction and must be tied to benchmarks and other monuments.

Installation of instrumentation must, at all times be performed in the presence of the Engineer.

5-1.40E Materials

The settlement platform must consist of a standpipe mounted on a plywood platform. The standpipe must be enclosed in a galvanized pipe equipped with an air vent at the top and an overflow drain connection at the bottom. Plastic tubing must be extended from these two connections to the indicating unit where the ends are sheltered to keep them open and free as shown on Figure 7 in the Caltrans Standard California Test Method 112.

5-1.40F Construction

During embankment construction, you must install devices to monitor settlement in the embankment areas and at specified CIDH pile locations as follows:

Station	Offsets (ft.)
21+90.00 @ "A" Line	0.00
22+90.00 @ "A" Line	0.00
23+90.00 @ "A" Line	0.00
24+90.00 @ "A" Line	0.00
25+90.00 @ "A" Line	0.00
26+59.43 @ "A" Line	40.47 right
26+90.00 @ "A" Line	0.00
27+43.30 @ "A" Line	0.30 right
28+27.18 @ "A" Line	39.88 left
28+53.43 @ "A" Line	80.05 right
29+11.05 @ "A" Line	80.06 left
29+37.31 @ "A" Line	39.88 right
30+21.18 @ "A" Line	0.30 left
30+75.00 @ "A" Line	0.00
31+05.05 @ "A" Line	40.47 left
31+75.00 @ "A" Line	0.00

32+75.00 @ "A" Line	0.00
33+75.00 @ "A" Line	0.00
34+75.00 @ "A" Line	0.00
35+75.00 @ "A" Line	0.00
21+20.00 @ "D" Line	0.00
22+20.00 @ "D" Line	0.00
23+20.00 @ "D" Line	0.00
24+20.00 @ "D" Line	0.00
25+20.00 @ "D" Line	0.00
25+33.24 @ "D" Line	0.00
27+61.51 @ "D" Line	0.00
27+75.00 @ "D" Line	0.00
28+75.00 @ "D" Line	0.00
29+75.00 @ "D" Line	0.00
30+75.00 @ "D" Line	0.00
31+75.00 @ "D" Line	0.00

The Work includes, but is not limited to: installing surface platforms, furnishing monitoring equipment, and recording observations and measurements from the monitoring points on a periodic basis. The settlement platform must consist of a standpipe mounted on a plywood platform. The standpipe must be enclosed in a galvanized pipe equipped with an air vent at the top and an overflow drain connection at the bottom. Plastic tubing must be extended from these two connections to the indicating unit where the ends are sheltered to keep them open and free as shown on Figure 7 in the Caltrans Standard California Test Method 112. The standpipe unit must be placed on either the original ground or a working table not more than 2-feet above original ground. The standpipe must be connected by plastic tubing to a transparent sight tube mounted vertically in protected box outside the limits of embankment.

The limits of embankments bridge approach and retaining walls are shown on plans. The duration of the required settlement period at each location will be determined by the Engineer. The estimated duration of the settlement periods are listed in the settlement tables in Section 19 of these specifications. The Engineer may allow an increase or decrease in any settlement period. An allowed increase or decrease in any settlement period will result in an increase or decrease in the number of working days if the settlement period is considered to be the current controlling operation in conformance with Section 8-1.05 Time of the standard specifications. Adjustments of contract time due to increases or decreases in settlement periods will be made by contract change order.

After completion of the installation of the monitoring devices, the Contractor must maintain and repair any damage to the monitoring devices caused by the Contractor's work at no cost to the City. The devises must be removed at such time within the period of the contract as allowed by the Engineer.

5-1.40F Payment

Payment for settlement monitoring is included is in the various items of work required to construct the project.

Replace section 5-1.41 with:

5-1.41 Track Settlement Monitoring and Ballast Tamping for Railroad Tracks

5-1.41 General

5-1.41ASummary

Section 5-1.41 includes specifications for furnishing, installing, and monitoring settlement instrumentation to monitor all railroad track settlements. The Work includes, but is not limited to: installing surface control points, furnishing monitoring equipment, and recording observations and measurements from the monitoring points on a periodic basis before, during, and after bridge construction.

The Contractor is responsible for surveying the elevations of the surface control points in accordance with the requirements herein. Elevations must be determined before operations begin to establish a baseline, and during and after operations to monitor any movements related to the bridge construction. All monitoring points will be surveyed after construction has been completed to evaluate long-term settlements, as specified herein.

Minimum instrumentation requirements are specified herein. Additionally, the Contractor must install other instrumentation as necessary to control operations, monitor track movements and ground response to achieve specified project requirements and to prevent damage to existing structures and facilities.

The Contractor must document and monitor the top of all rail elevations starting from 200-ft northeast from the intersection of the “A” line with each track and extending to 100-ft southwest from the intersection of the “D” line with each track.

5-1.41B Definitions

Surface Control Points: Control points established as a reference for measuring elevation of the top of rail using optical survey methods.

5-1.41C Submittals

Submit working drawings for the settlement monitoring. Provide sufficient detail to allow the Engineer to judge whether the proposed equipment, materials, and procedures will meet the Contract requirements. All drawings shall be legible with dimensions accurately shown and clearly marked in English. Drawings and photographs transmitted by a facsimile will not be accepted. Working drawings must include:

1. Submit surveying personnel qualifications in accordance with the requirements herein.
2. Submit the following, at least one (1) week before scheduled installation of monitoring points:
    a. Submit the proposed schedule for installing the surface control points.
    b. Description of methods and materials for installing and protecting surface control points.
    c. Drawings with locations of proposed monitoring points shown in plan.
3. Reports and Records:
    a. The Contractor must submit all reports of monitoring data to the Engineer.
    b. Within 72 hours following installation of the instruments, submit drawings showing the actual as-built installed location, the instrument identification number, and the installation date and time. Include details of installed instruments, accessories, and protective measures including all dimensions and materials used.
    c. Submit surveyed baseline measurements of all monitoring points at least one week prior to commencing excavation and fill placement to establish baseline readings.
    d. Submit surveyed measurements of monitoring points during and after construction.
    e. Submit existing track elevation measurements before, during and after construction is completed.

5-1.41D Quality Control and Assurance

All surveying must be performed by a land surveyor licensed in the State of California with previous experience surveying for the detection of surface deformations

Install all monitoring points and instrumentation as accepted by the Engineer.

Surveying for settlement monitoring instrumentation must be referenced to the same control points and benchmarks established for constructing the project. Control points must be tied to benchmarks and other monuments outside of the zone of influence of the ground settlement and excavation or construction.

Installation of instrumentation must, at all times be performed in the presence of the Engineer.

5-1.41E Materials

All instrumentation must remain the property of the Contractor following completion of the Work, and must be removed or abandoned according to applicable codes and standards unless otherwise noted. All instrumentation must be removed where located on the Railroad right-of-way. Instrumentation may not be abandoned on the Railroad right-of-way.

Surface control points must be established by an inscribed marking or approved surveyors nail driven flush with the surface in asphalt or concrete paved areas. In landscaped areas, surface control points must be established by driving a 2-inch by 2-inch timber stake flush with the ground. The stake must be driven to a depth required to provide a stable control point given the soil conditions. Each control point must have a tag or marking indicating the control point number.

5-1.41F Construction

Up to 2" of theoretical settlement may occur to the tracks due to the fill placement for the temporary and permanent roadway. Any ground movements (horizontal or vertical) shall be limited to values that shall not cause damage to the tracks. The allowable settlements are listed in Table 1 below.

Table 1 – Allowable Movement

Site Feature	Allowable Vertical Movement (inches)	Allowable Horizontal Movement (inches)
Top of Rail	0.25	0.25

If any ground movement exceeds the values shown in Table 1, the contractor must notify the Engineer and Railroad representative immediately.

Ballast Tamping

At the discretion of UPRR, UPRR may determine that the track elevation needs to be corrected to the original grade, at which time UPRR will hand-tamp the ballast or bring in a Ballast Tamping/Lining Machine to raise the tracks to the original track elevation. The estimated cost for UPRR to bring in a ballast tamping machine and correct the track elevation is $10,000 per occurrence. For bidding purposes, you must assume a total of two track corrections/ballast tamping. The cost of the first two ballast tamping's must be borne by you and is included in the unit bid price.

Any ballast tamping required by UPRR, in addition to that specified in these special provisions, will be paid as change order. The Contractor must pay the Railroad directly for the ballast tamping cost and must submit a copy of UPRR ballast tamping payments for reimbursement by the City. No markups will be allowed for the reimbursed cost of ballast tamping.

If the completion of the work is delayed or interfered with by reason of the UPRR's delay in completing the tamping activities, the Contractor will have no claim for damages or extra compensation, but additional working days will be warranted if the controlling item of work is deemed to be delayed by UPRR forces.

Surface Control Points

Initial survey measurements must be obtained prior to any fill placement or excavation within 25' of the existing tracks and at one week intervals after beginning fill placement and or excavation operations until work is complete or when the engineer no longer feels it is necessary. You must submit a survey monitoring report showing measured elevation and baseline elevation to the engineer within 24 hours of

performing each surveying measurement.

For excavation/shoring within 24' of track centerline, track shall be surveyed immediately after shoring is installed, after the first passage of a train following shoring installation, and daily thereafter. For work greater than 24' from track centerline, track shall be surveyed at least daily.

Establish a system of surface control points. Survey control points must be installed at 25' intervals along each rail.

Surveying of surface control points will consist of determining the elevation of each control point with respect to a benchmark selected by the Engineer to a precision of 0.01 foot.

Surface Control Points: Remove all surface control points after they are no longer required as authorized by the Engineer.

^^

7 LEGAL RELATIONS AND RESPONSIBILITY TO THE PUBLIC

Replace section 7-1.02K(6)(j)(iii) with:

Section 7-1.02K(6)(j)(iii) includes specifications for handling, removing, and disposing of earth material containing lead.

Submit a lead compliance plan.

Lead is present in earth material on the job site. Excavated material to be handled in accordance with section 14-11.03.

Lead has been detected in earth material to a depth of 2.5 feet in unpaved areas of the highway. Levels of lead found on the job site range from 62 to 391 mg/kg total lead with an average concentration of 118.4 mg/kg total lead as analyzed by EPA test method 6010 or EPA test method 7000 series and based upon a 95 percent upper confidence limit. Levels of lead found within project limits have a predicted average soluble concentration of 8.6 mg/L as analyzed by the California Waste Extraction Test and based upon a 95 percent upper confidence limit.

Handle earth material containing lead under all applicable laws, rules, and regulations, including those of the following agencies:

1. Cal/OSHA
2. CA RWQCB, Region 5S, Central Valley
3. CA Department of Toxic Substances Control

If earth material is disposed of:

1. Disclose the lead concentration of the earth material to the receiving property owner when obtaining authorization for disposal on the property
2. Obtain the receiving property owner's acknowledgment of lead concentration disclosure in the written authorization for disposal
3. You are responsible for any additional sampling and analysis required by the receiving property owner

If you choose to dispose of earth material at a commercial landfill:

1. Transport it to a Class III or Class II landfill appropriately permitted to receive the material

2. You are responsible for identifying the appropriately permitted landfill to receive the earth material and for all associated trucking and disposal costs, including any additional sampling and analysis required by the receiving landfill

^^

8 PROSECUTION AND PROGRESS

Add to section 8-1.10B:

You may close N. MacArthur Drive for a period of no more than 2 weeks to complete the Stage 4 work. Comply with Section 12.

Liquidated damages for not completing sufficient work to re-open N. MacArthur Drive within 2 weeks are $950 per day.

^^

9 PAYMENT

Add to section 9-1.03:

The City's goal is to spend at a minimum 50% of the money programmed in any given fiscal year, which includes being invoiced and paid by Caltrans in order to guarantee additional funds for the following fiscal year. The contractor must submit an expenditure schedule of funds by fiscal year at the preconstruction meeting for review and approval by the City.

As a result of the Special Funding Agreement, you must adhere to the following requirements:

a) You must be prompt with monthly invoicing and must submit mid-month and end of month invoices in April, May, and June of each year.
b) You must submit an expenditure schedule of funds by fiscal year at the preconstruction meeting for review and approval by the City.

Add to section 9-1.16C:

The following items are eligible for progress payment even if they are not incorporated into the work:

1. Landscape Planting
2. Irrigation System
3. Geosynthetic Pavement Interlayer (Paving Fabric)
4. Mechanically Stabilized Embankment
5. Furnish Temporary Prefabricated Modular Steel Truss Bridge
6. 108" Permanent Steel Casing
7. Prestressing
8. Furnish Precast/Prestressed Concrete Girder (50'-60')
9. Furnish Precast/Prestressed Concrete Girder (60'-70')
10. Joint Seal (MR 2')
11. Bar Reinforcing Steel (Bridge)
12. Bar Reinforcing Steel (Bridge)(Detour)
13. Bar Reinforcing Steel (Retaining Wall)
14. Headed Bar Reinforcement

15. 12” Reinforced Concrete Pipe
16. 18” Reinforced Concrete Pipe
17. 24” Reinforced Concrete Pipe
18. 30” Reinforced Concrete Pipe
19. 36” Reinforced Concrete Pipe
20. 48” Reinforced Concrete Pipe
21. 60” Reinforced Concrete Pipe
22. 10” Reinforced Concrete Pipe (Class III)
23. Isolation Casing
24. Miscellaneous Metal (Bridge)
25. Miscellaneous Metal (Bridge) (Detour)
26. Bridge Deck Drainage System
27. Sewer Line Modifications
28. Water Line Modifications
29. Chain Link Fence (Type CL-4)
30. Metal Railing
31. Chain Link Railing (Type 6 Modified)
32. Crash Cushion (QUADGUARD II)
33. Cable Railing
34. Removable Railing
35. Pedestrian Railing (Detour)
36. Protective Railing (Detour)
37. Pavement Marker (Retroreflective)
38. Traffic Signal Stage Construction
39. Traffic Signal and Lighting (11th St & N. MacArthur Dr)
40. Underpass Lighting System
41. Street and Bridge Lighting System

^^^

The Contractor is responsible for all field office and jobsite security.

The field office must be furnished with doors and windows capable of being locked. The field office must be partitioned to provide two private offices of not less than 120 square feet and a conference area of not less than 250 square feet.

The Contractor must provide the Engineer with a copy of written permission or agreement to place the Resident Engineer's trailer on private property unless such private property is within a project construction easement.

The Contractor must provide and maintain three (3) telephone lines and three (3) telephones capable of rollover ring and pay all installation charges.

The office must be furnished with the following:

1. Five (5) desks capable of being locked
2. Four (4) lockers (minimum 72” high x 18” deep x 12” wide)
3. One (1) conference table (wood, 3’ wide x 10’ long)
4. One (1) drafting table
5. Two (2) 30” by 72” tables
6. Ten (10) conference room chairs, metal folding, with padded seats and backs.
7. Five (5) desk chairs with arms
8. One (1) drafting stool
9. One (1) fully serviced multi-function unit copying machine (color printer, scanning, fax, and email capabilities) with automatic feed and collator similar to Konica-Minolta Bizhub C652/C652DS, or equal, capable of making letter size (8 ½ x 11), legal size (8 ½ x 14), and ledger size (11x17) copies together with sufficient paper and materials for 2000 copies per month. Contractor must provide all cables, drivers, and software necessary for the color printer/copier/scanner/fax combination to function on a compatible Windows system.
10. Three (3) four-drawer legal size filing cabinets
11. One (1) plan rack
12. One (1) 15 cubic foot refrigerator
13. One (1) Microwave
15. One (1) Fire Extinguisher
16. One (1) Safety Kit (Bandages, gauze, etc.)
17. Four (4) Waste basket(s) and one larger “kitchen” style waste can with lid.
18. Two (2) Tack board 36 x 42 inches, cork bulletin type.
19. One (1) Dry erase board 96 x 48 inches, magnetic with four-color set of compatible markers and eraser.
20. Two (2) Dry erase board 48 x 36 inches, magnetic with four-color set of compatible markers and eraser.

The private offices must be provided with at least 25 feet of 12-inch wide shelving located as directed and two (2) portable book cases, each with a minimum of three shelves, four feet long. Title to the trailer and provided contents must remain with the Contractor.

All equipment furnished must be of standard quality and like new.

The Contractor is responsible for Category 5e Data wiring to be within the walls of each field office trailer. Each cable must terminate at each desk and each office with a RJ45 plug at a labeled wall faceplate. There must be two extra cable runs for a printer and a spare (location of extra data plugs to be determined at a time at which there is an office layout plan for the trailer). Each cable must terminate at a patch panel with labels that correspond to each wall faceplate terminations. The patch panel must be

mounted in an area that is out of the way of foot traffic in an area that is at least 4 feet by 2 feet to allow for data routing and broadband equipment. (2) 2-foot by 3-foot shelves must be installed within the above stated area to accommodate the routing and broadband equipment. The Contractor must provide wireless internet access for the Engineer's field office. The Contractor must provide all necessary hardware and cabling. All cable runs to be certified by the installer.

The cost of installing and removing the office, including the cost of all utility connections and monthly utility bills, must be included in the lump sum price for Furnish Field Office and no other payment for installing and removing the office will be made.

The field office and related facilities must be supplied and maintained by the Contractor throughout the construction period; including sewage holding tank, copy machine, and drinking water, and must be removed from the project site when, and as, directed. Provide drivable gravel or other types of surfaces to allow for all weather access to the field office and adequate vehicle parking of not less than 6 spaces adjacent to the office with unrestricted access.

The Contractor must restore the area to the original condition, or as directed by the Engineer, once the engineer has released the field office.

10-4.03 CONSTRUCTION

Not Used

10-4.04 PAYMENT

The Department pays you for furnish field office as follows:

1. A total of 90 percent of the item total upon the Engineer determining the field office is complete and acceptable.
2. A total of 100 percent of the item total upon contract acceptance

^^

11 QUALITY CONTROL AND ASSURANCE

Add to section 11-2.01:

The following must comply with the specifications for PC concrete QC:

1. Precast girder segments

^^

12 TEMPORARY TRAFFIC CONTROL

Add to section 12-1.01:

All traffic control plans submitted during construction shall be prepared under the supervision of Registered Civil Engineer and stamped by the Registered Engineer for City's review and comments. Contractor must incorporate City's concerns for traffic related issues.

Replace section 12-1.03 with:

You are responsible for the cost of furnishing all flaggers, including transporting flaggers and furnishing stands and towers for flaggers to provide for the passage of traffic through the work as specified in sections 7-1.03 and 7-1.04. The cost of furnishing all flaggers, including transporting flaggers and

furnishing stands and towers for flaggers to provide for the passage of traffic through the work as specified in sections 7-1.03 and 7-1.04 is paid under Traffic Control System bid item.

Replace section 12-2 with:

12-2 CONSTRUCTION PROJECT FUNDING SIGNS

12-2.01 GENERAL

Section 12-2 includes specifications for installing construction project funding signs.

Details for construction project funding signs are shown.

Keep construction project funding signs clean and in good repair at all times.

12-2.02 MATERIALS

Construction project funding signs must be wood post signs complying with section 56-4.

Sign panels for construction project funding signs must be framed, single sheet aluminum panels complying with section 56-2.

The background on construction project funding signs must be Type II retroreflective sheeting on the Authorized Material List for signing and delineation materials.

The legend must be retroreflective, except for nonreflective black letters and numerals. The colors blue and orange must comply with PR Color no. 3 and no. 6, respectively, as specified in the Federal Highway Administration's *Color Tolerance Chart*.

The legend for the type of project on construction project funding signs must read as follows:

BRIDGE CONSTRUCTION

The legend for the types of funding on construction project funding signs must read as follows and in the following order:

FEDERAL HIGHWAY BRIDGE PROGRAM FUNDS

PROPOSITION 1B TRANSPORATION BOND FUNDS

CITY TRANSPORTATION FUNDS

The legend for the year of completion on construction project funding signs must read as follows:

YEAR OF COMPLETION 2017

The size of the legend on construction project funding signs must be as described. Do not add any additional information unless authorized.

12-2.03 CONSTRUCTION

Install 2 Type 1 construction project funding signs at the locations designated by the Engineer before starting major work activities visible to highway users.

When authorized, remove and dispose of construction project funding signs upon completion of the project.

12-2.04 PAYMENT

Not Used

Replace section 12-3.16 with:

12-3.16 TEMPORARY SIGNAL SYSTEM

12-3.16A General

Installing temporary signal system (TSS) consists of installing and maintaining temporary traffic signal, lighting, and flashing beacons for traffic control.

Furnish all materials and equipment for a TSS, including flashing beacons, signal heads, mast arms, luminaires, wood poles, conductors, and hardware as shown on the plans.

Material and equipment used in the TSS may be new or used but must be suitable for the intended use.

Orient each signal face to be clearly visible to traffic approaching from the direction that the signal is intended to control.

12-3.16B Operation

TSS must operate at nominal 120 V(ac). Lighting must operate at 240 V(ac).

Unless otherwise directed, the system must operate on a continuous, 24-hour basis except when it is necessary that traffic be controlled by flaggers.

The City will perform timing for the TSS. Notify the Engineer 48 hours in advance of the TSS being ready

12-3.16C Maintaining Temporary Signal System

You are responsible for maintaining the TSS.
If components in the TSS are damaged, displaced, or cease to operate or function as specified from any cause during the progress of the work, immediately repair or replace the components, then restore to the original condition. Components include signs, flashing beacons, and signal equipment.

If the TSS is out of operation, provide flaggers, at your expense, to maintain traffic control until the traffic signals are returned to service.

12-3.16D Conduit

At locations where conduit is required to be installed under pavement and if a delay to vehicles will not exceed 5 minutes as determined by the engineer, conduit may be installed by the trenching in pavement method as specified in section 86-2.05C.

12-3.16E Conductors and Wiring

Conductors must be the types specified in section 86-2.08 or Type UF cable of the size and number of conductors shown. The minimum conductor size must be no. 12.

If conductors are placed across paved areas, placement must comply with one of the following:

1. Place in a conduit
2. Suspend at least 25 feet above the roadway

Conductors placed outside of paved areas must be placed by one of the following methods:

1. Direct burial method with Type UF cable installed at a minimum depth of 24 inches below grade.
2. Placed in conduit. If Type 1 or 2 conduit is used, the minimum depth must be 12 inches. If Type 3 conduit is used, the minimum depth must be 18 inches.
3. Suspended from wood poles with a minimum clearance of 25 feet from grade at any point. Place the portions of the conductor installed on the face of wood poles in either Type 3 or Type 4 conduit.

Conductors placed across structures must be placed in a Type 1, 2, or 3 conduit. Install the conduit on the outside face of the railing and secure by a method as accepted by the Engineer.

Conductors to a terminal compartment or signal head on a pole may be spliced to through conductors of the same phase in a pull box adjacent to the pole. Do not splice conductors or cables except in pull boxes or in NEMA Type 3R enclosures.

12-3.16F Bonding and Grounding

Comply with section 86-2.10.

12-3.16G Service

12-3.16G(1) General

Use the following method to provide power for the TSS:

1. Commercial power from an existing utility company and existing service.

12-3.16G(2) Commercial Power

Commercial electrical power is available at the job site.

12-3.16I Detectors

Video detection cameras must be used for detecting vehicles as shown on the plans.

The CCTV-PTZ camera must be installed temporarily during stage construction as shown on the plans. Communication to the City's Traffic Control Center must remain at all times using the existing signal interconnect cable as shown on the plans. Contractor must install the Ethernet switch in the existing cabinet to allow for the camera to communicate with the City's Traffic Control Center. Relocate the camera and Ethernet switch to the new pole and cabinet when required.

12-3.16J Completion and Restoration

Backfill pole holes.

The following materials may be abandoned in place when no longer required:

1. Conductors placed in slots across paved areas
2. Direct buried cables, installed 24 inches or more below the ground surface

Add section 12-3.18:

12-3.18 TEMPORARY CRASH CUSHION

12-3.18A General

12-3.18A(1) Summary

Section 12-3.18 includes specifications for furnishing, installing, maintaining, and removing temporary crash cushions.

12-3.18A(2) Submittals

Submit one copy of the manufacturer's plan and parts list for each model installed.

Submit a certificate of compliance from the manufacturer for each temporary crash cushion used on the project.

12-3.18B Materials

Temporary crash cushion must be either an ADIEM - 350 as manufactured by Trinity Industries, Inc., an ABSORB 350 TL-3, as manufactured by Barrier Systems, Inc., or the QuadGuard CZ System, Model QZ2406Y or ACZ350, both as manufactured by Energy Absorption Systems, Inc.

12-3.18B(1) ADIEM - 350

Obtain temporary crash cushion ADIEM - 350 from the manufacturer, Trinity Industries, Inc., P.O. Box 99, 950 West 400S, Centerville, Utah 84014, telephone (800)-772-7976.

12-3.18B(2) ABSORB - 350 TL-3

ABSORB 350 TL-3 must be a non-redirective, gating type, and must conform to the description as follows:

Contract Item Description	Manufacturer's Product Description
ABSORB-350	ABSORB 350 TL-3 (9 element) CRASH CUSHION

Obtain temporary crash cushion ABSORB 350 TL-3 from the following sources:

1. Manufacturer:
   Barrier Systems, Inc.
   180 River Road
   Rio Vista, CA 94571
   Telephone: (888) 800-3691

2. Distributors: Northern
   California: Statewide Safety &
   Signs, Inc.
   130 Grobric Court
   Fairfield, CA 94533
   Telephone: (707) 864-9956

12-3.18B(3) QuadGuard CZ System and ACZ350 System

Obtain Quadguard CZ System and ACZ350 System from the following sources:

1. Manufacturer: Energy Absorption Systems, Inc. One East Wacker Drive, Suite 3000, Chicago, IL 60601-2076, Telephone (760) 438-7887.

2. Distributors:
   2.1 Traffic Control Service, Inc., 1881 Betmor Lane, Anaheim, CA 92805, Telephone: (800)222-8274.

   2.2 Traffic Control Service, Inc., 8585 Thys Court, Sacramento, CA 95828, Telephone: (800) 884-8274

12-3.18C Construction

12-3.18C (1) Installation

Install temporary crash cushion under the manufacturer's recommendations.

Attach a Type P marker panel to the front of the temporary crash cushion when the closest point of the crash cushion array is within 12 feet of the traveled way. Firmly fasten the marker panel, when required, to the temporary crash cushion with commercial quality hardware or by other methods.

Dispose of surplus excavated material remaining after the temporary crash cushion has been installed in a uniform manner along the adjacent roadway as designated by the Engineer.

Install concrete anchorage devices to attach the QuadGuard CZ System to the asphalt concrete pad under the manufacturer's recommendations and limit the anchorage devices to those which have been satisfactory for such application by previous testing.

Remove and immediately replace temporary crash cushions damaged beyond repair by public traffic when ordered by the Engineer.

12-3.18C (2) Maintenance

Keep on hand 2 replacement modules for each ADIEM in case of minor damage.

Fill holes left in the pavement after removal of the anchor rods with slurry cement backfill under section 19-3.02D.

At the completion of the project, temporary crash cushion and marker panels become your property. Remove them from the job site.

Immediately repair temporary crash cushions damaged due to your operations at your expense. Remove and replace at your expense temporary crash cushions damaged beyond repair due to your operations.

12-3.18D Payment

Engineer measures temporary crash cushion by the unit from actual count of cushions used in the work.

Payment for repairing the temporary crash cushion damaged by public traffic will be by change order work.

Add to section 12-4.01:

You must comply with the following:

- Maintain traffic controls for all roads. Traffic control delays must not exceed 15 minutes. Two way traffic must be maintained during non-working hours with excavated areas backfilled or plated. During working hours, two-way traffic control must be maintained with a minimum of one lane open and appropriate flaggers equipped with two-way radios.
- School buses must be passed through the work zone with minimal delays.
- All traffic control plans must adhere to the California Manual on Uniform Traffic Control Devices (CA MUTCD).
- Portable Changeable Message Signboard (PCMS) for traffic information as shown on traffic control plans are required and must be in place at least two weeks prior to construction.
- K-rails placed within the public right-of-way must be made visible at night.
- Access to all properties must be maintained at all times except when work is occurring at the access point. Minimal delays will be allowed to provide access within the work zone area. Driveway access must be fully restored at the end of each workday. Driveways disturbed by the contractor within County right of way must be replaced with in-kind or better materials per County Standard R-17.
- Residents and businesses must be notified in writing, as approved by the Engineer, 48 hours in advance of any impacts to their access.
- Any areas where parking is to be restricted must have signs noticing the time period placed at least 48 hours in advance of the work.

Add to section 12-4.02A:

If work including installing, maintaining, and removing Type K temporary railing is to be performed within 6 feet of the adjacent traffic lane, close the adjacent traffic lane.
Except as listed above, closure of the adjacent traffic lane is not required for installing, maintaining, and removing traffic control devices.
For grinding and grooving operations, sawcutting concrete slabs, and installing loop detectors with an impact attenuator vehicle as a shadow vehicle, closure of the adjacent traffic lane is not required.

Personal vehicles of your employees must not be parked on the traveled way, within UPRR right of way, including sections closed to traffic.

If work vehicles or equipment are parked within 6 feet of a traffic lane, close the shoulder area with fluorescent orange traffic cones or portable delineators. Place the cones or delineators on a taper in advance of the parked vehicles or equipment and along the edge of the pavement at 25-foot intervals to a point not less than 25 feet past the last vehicle or piece of equipment. Use at least 9 cones or delineators for the taper. Use a W20-1, "Road Work Ahead," W21-5b, "Right/Left Shoulder Closed Ahead," or C24(CA), "Shoulder Work Ahead," sign mounted on a crashworthy, portable sign support with flags. The sign must be placed as ordered by the Engineer and at least 48 by 48 inches in size. If a cone or delineator is displaced or overturned, immediately restore the device to its original position or location.

A minimum of 1 paved traffic lane not less than 12 feet wide must be open for use by traffic in each direction of travel.

Erect precast girders within UPRR right of way as allowed by UPRR.
Have the necessary materials and equipment on site to erect girders over UPRR tracks in accordance with the accepted falsework and erection plans.

Replace section 12-5 with:

12-5 TRAFFIC CONTROL SYSTEM FOR LANE CLOSURE

12-5.01 GENERAL

Section 12-5 includes specifications for closing traffic lanes with stationary and moving lane closures on 2-lane, 2-way highways, including roads related to or involving this project. The traffic control system for a lane closure must comply with the details shown.

Traffic control system includes signs.

12-5.02 MATERIALS

12-5.03 CONSTRUCTION

12-5.03A General

During traffic striping and pavement marker placement using bituminous adhesive, control traffic with a stationary or a moving lane closure. During other activities, control traffic with stationary lane closures.

Whenever components of the traffic control system are displaced or cease to operate or function as specified from any cause, immediately repair the components to the original condition or replace the components and restore the components to the original location.

12-5.03B Stationary Lane Closures

For a stationary lane closure made only for the work period, remove components of the traffic control system from the traveled way and shoulder, except for portable delineators placed along open trenches or excavation adjacent to the traveled way at the end of each work period. You may store the components at selected central locations designated by the Engineer within the limits of the highway.

You may use a pilot car to control traffic. If a pilot car is used for traffic control, the cones shown along the centerline need not be placed. The pilot car must have radio contact with personnel in the work area. Operate the pilot car through the traffic control zone at a speed not greater than 25 miles per hour.

12-5.03C Moving Lane Closures

A changeable message sign used in a moving lane closure must comply with section 12-3.12 except the sign must be truck-mounted. The full operational height to the bottom of the sign may be less than 7 feet above the ground but must be as high as practicable.

A flashing arrow sign used in a moving lane closure must be truck-mounted. Operate the flashing arrow sign in the caution display mode whenever it is being used on a 2-lane, 2-way highway.

12-5.04 PAYMENT

Traffic control system for lane closure is paid for as traffic control system. Flagging costs are paid for as traffic control system.

The requirements in section 4-1.05 for payment adjustments do not apply to traffic control system. Payment adjustments for traffic control system will be made for an increase or decrease in traffic control work if ordered and will be made on the basis of the cost of the necessary increased or decreased traffic control. The adjustments will be made on a force account basis for increased work and estimated on the same basis in the case of decreased work.

A traffic control system required by change order work is paid for as a part of the change order work.

Replace section 12-8 with:

12-8 TEMPORARY PAVEMENT DELINEATION

12-8.01 GENERAL

Section 12-8 includes specifications for placing, applying, maintaining, and removing temporary pavement delineation.

Temporary signing for no-passing zones must comply with section 12-3.06.

Temporary painted traffic stripes and painted pavement markings used for temporary delineation must comply with section 84-3.

12-8.02 MATERIALS

12-8.02A General

Not Used

12-8.02B Temporary Lane Line and Centerline Delineation

Temporary pavement markers must be the same color as the lane line or centerline markers being replaced. Temporary pavement markers must be temporary pavement markers on the Authorized Material List for long-term day/night use. Place temporary pavement markers under the manufacturer's instructions.

12-8.02C Temporary Edge Line Delineation

On multilane roadways, freeways, and expressways open to traffic where edge lines are obliterated and temporary pavement delineation to replace those edge lines is not shown, provide temporary pavement delineation for:

1. Right edge lines consisting of (1) a solid 4-inch wide traffic stripe tape of the same color as the stripe being replaced, (2) traffic cones, or (3) portable delineators or channelizers placed longitudinally at intervals not exceeding 100 feet
2. Left edge lines consisting of (1) solid 4-inch wide traffic stripe tape of the same color as the stripe being replaced, (2) traffic cones, (3) portable delineators or channelizers placed longitudinally at intervals not exceeding 100 feet, or (4) temporary pavement markers placed longitudinally at intervals not exceeding 6 feet

12-8.02D Temporary Traffic Stripe Tape

If shown, temporary traffic stripe tape must be one of the types of temporary, removable striping tape on the Authorized Material List.

12-8.02E Temporary Traffic Stripe Paint

Not Used

12-8.02F Temporary Pavement Marking Tape

If shown, temporary pavement marking tape must be one of the types of temporary, removable pavement marking tape on the Authorized Material List and must be applied and removed as specified for applying and removing temporary, removable traffic stripe tape.

12-8.02G Temporary Pavement Marking Paint

You may use one of the types of temporary removable pavement marking tape or permanent pavement marking tape on the Authorized Material List instead of temporary pavement marking paint.

12- 8.02H Temporary Pavement Markers

If shown, temporary pavement markers must be one of the temporary pavement markers on the Authorized Material List for long term day/night use.

12-8.03 CONSTRUCTION

12-8.03A General

Wherever work activities obliterate pavement delineation, place temporary or permanent pavement delineation before opening the traveled way to traffic. Place lane line and centerline pavement delineation for traveled ways open to traffic. On multilane roadways, freeways and expressways, place edge line delineation for traveled ways open to traffic.

Establish the alignment for the temporary pavement delineation including required lines or markers. Surfaces to receive an application of paint or removable traffic tape must be dry and free of dirt and loose material. Do not apply temporary pavement delineation over existing pavement delineation or other temporary pavement delineation. Maintain temporary pavement delineation until it is superseded or you replace it with a new pattern of temporary pavement delineation or permanent pavement delineation.

When the Engineer determines the temporary pavement delineation is no longer required for the direction of traffic, remove the temporary pavement markers, underlying adhesive, and removable traffic tape from the final layer of surfacing and from the existing pavement to remain in place. Remove temporary pavement delineation that conflicts with any subsequent or new traffic pattern for the area.

All maintenance on temporary delineation are your responsibility.

12-8.03B Temporary Lane line and Centerline Delineation

Whenever lane lines or centerlines are obliterated and temporary pavement delineation to replace the lines is not shown, the minimum lane line and centerline delineation must consist of temporary pavement markers placed longitudinally at intervals not exceeding 24 feet. For temporary pavement markers on the Authorized Material List for long-term day/night use, cement the markers to the surfacing with the adhesive recommended by the manufacturer except do not use epoxy adhesive to place the pavement markers in areas where removal of the markers will be required.

For temporary lane line or centerline delineation consisting entirely of temporary pavement markers on the Authorized Material List for short-term day/night use, 14 days or less, place the markers longitudinally at intervals not exceeding 24 feet. Do not use the markers for more than 14 days on lanes opened to traffic. Place the permanent pavement delineation before the end of the 14 days. If the permanent pavement delineation is not placed within the 14 days, replace the temporary pavement markers with additional temporary pavement delineation equivalent to the pattern specified or shown for the permanent pavement delineation for the area. The Department does not pay for the additional temporary pavement delineation.

12-8.03C Temporary Edge Line Delineation

You may apply temporary painted traffic stripe where removal of a 4-inch wide traffic stripe is not required.

The Engineer determines the lateral offset for traffic cones, portable delineators, and channelizers used for temporary edge line delineation. If traffic cones or portable delineators are used for temporary pavement delineation for edge lines, maintain the cones or delineators during hours of the day when the cones or delineators are being used for temporary edge line delineation.

Channelizers used for temporary edge line delineation must be an orange surface-mounted type. Cement channelizer bases to the pavement under section 85 for cementing pavement markers to pavement except do not use epoxy adhesive to place channelizers on the top layer of the pavement. Channelizers must be one of the 36-inch, surface-mounted types on the Authorized Material List.

Remove the temporary edge line delineation when the Engineer determines it is no longer required for the direction of traffic.

12-8.03D Temporary Traffic Stripe Tape

Apply temporary traffic stripe tape under the manufacturer's instructions. Slowly roll the tape with a rubber-tired vehicle or roller to ensure complete contact with the pavement surface. Apply the tape straight on a tangent alignment and on a true arc on a curved alignment. Do not apply the tape when the air or pavement temperature is less than 50 degrees F unless the installation procedures are authorized beforehand.

The temporary traffic stripe tape must be complete in place at the location shown before opening the traveled way to traffic.

12-8.03E Temporary Traffic Stripe Paint

Apply 1 or 2 coats of temporary traffic stripe paint for new or existing pavement.
The painted temporary traffic stripe must be complete in place at the location shown before opening the traveled way to traffic. Removal of painted temporary traffic stripe is not required.

12-8.03F Temporary Pavement Marking Tape

Apply temporary pavement marking tape at the locations shown. The tape must be complete in place at the location shown before opening the traveled way to traffic.

12-8.03G Temporary Pavement Marking Paint

Apply and maintain temporary pavement markings consisting of painted pavement markings at the locations shown. The painted temporary pavement marking must be complete in place at the location shown before opening the traveled way to traffic. Removal of painted temporary pavement marking is not required.

Apply 1 or 2 coats of temporary pavement marking paint for new or existing pavement.

12- 8.03H Temporary Pavement Markers

Place temporary pavement markers under the manufacturer's instructions. Cement the markers to the surfacing with the manufacturer's recommended adhesive, except do not use epoxy adhesive in areas where removal of the pavement markers is required.

You may use retroreflective pavement markers specified in section 85 instead of temporary pavement markers , except to simulate patterns of broken traffic stripe. Retroreflective pavement markers used for temporary pavement markers must comply with section 85, except the waiting period before placing pavement markers on new HMA surfacing as specified in section 85-1.03 does not apply. Do not use epoxy adhesive to place pavement markers in areas where removal of the pavement markers is required.

Temporary pavement markers must be complete in place before opening the traveled way to traffic.

12-8.04 PAYMENT

Not Used

Add section 12-9:

12-9 CONSTRUCT TEMPORARY ACCESS ROAD

12-9.01 GENERAL

Section 12-9 includes specifications for placing, maintaining, and removing temporary access road.
Temporary access road to be constructed using Class 2 aggregate base. Class 2 aggregate base must be removed and the footprint must be returned to preconstruction conditions at the time of detour removal. Access must be maintained at all times for residential and emergency access.

12-9.02 MATERIALS

Not Used

12-9.02A General

Class 2 Aggregate base must comply with Section 26 Aggregate Bases.

12-9.03 CONSTRUCTION

Not Used

12-9.03A General

The temporary access road must comply with Section 19-5 compaction.

12-9.04 PAYMENT

Not Used

^^

13 WATER POLLUTION CONTROL

Add to section 13-3.01A:

The project is risk level 1.

^^

14 ENVIRONMENTAL STEWARDSHIP

Add to section 14-1.02:

An ESA exists on this project.
Before start of work, protect the ESA by installing Type ESA Temporary Fence.

Replace section 14-6.02 with:

14-6.02 SPECIES PROTECTION

14-6.02A General

Section 14-6.02 includes specifications for protecting regulated species or their habitat. This project is within or near habitat for regulated species shown in the following table:

Species Name
Kit Fox

14-6.02B Material

Not Used

14-6.02C Construction

14-6.02C(1) General

Not Used

14-6.02C(2) Protective Radius

Upon discovery of a regulated species, stop construction activities within a 100-foot radius of the discovery or as defined in the table below. Immediately notify the Engineer. Do not resume activities until receiving notification from the Engineer.

Regulated species name	Protective radius
Kit Fox	100-foot

14-6.02C(3) Protocols

Not used.

14-6.02C(5) Protection Measures

Within project limits, implement the following protection measures:

1. If any shrub/tree removal or bridge removal is to take place during the breeding season (February 15th – August 31st), a pre-construction breeding survey must be conducted within 7 days of these activities.
2. Birds must be prevented from nesting on the 11th street bridge from the start of construction until the existing bridge has been removed. Birds must be prevented from nesting on the 11th street temporary detour bridge from the start of construction until the temporary detour bridge has been removed. Birds must be prevented from nesting on the new 11th street bridge from the start of construction until the end of construction. Payment for preventing bird nesting is included in the various items of work required to construct the project.
3. Project related vehicles should observe a 20-mph speed limit within the project limits except on city and county roads to prevent accidental impacts to the Kit Fox. To the extent possible, night-time construction should be minimized. Off-road traffic outside of the designated project areas is prohibited.
4. To prevent inadvertent entrapment of kit foxes or other animals during construction phase of the project, all excavated, steep walled holes or trenches more than 2 feet deep should be covered at the close of each working day by plywood or similar materials, or provided with one or more escape ramps constructed of earth fill or wooden planks.
5. Kit foxes are attracted to den-like structures such as pipes and may enter stored pipes becoming trapped or injured. All construction pipes, culverts, or similar structures with a diameter of 4-inches or greater that are stored at the site for one or more overnight periods should be thoroughly inspected for kit foxes before the pipe is subsequently buried, capped, or otherwise used or moved in any way.

6. All food related trash items such as wrappers, cans, bottles, and food scraps should be disposed of in closed containers and removed at least once a week from the construction or project site.
7. To prevent harassment, mortality of kit foxes or destruction of dens by dogs or cats, no pets are allowed on the project site.
8. Use of rodenticides and herbicides in project areas must be restricted.
9. In the case of trapped animals, escape ramps or structures must be installed immediately to allow animal(s) to escape, or the California Department of Fish and Wildlife (CDFG) should be contacted for advice.
10. Any contractor, employee or agency personnel who inadvertently kills or injures a San Joaquin kit fox must immediately report the incident to their representative. This representative must contact the CDFG immediately in the case of a dead, injured or entrapped kit fox. The CDFG contact for immediate assistance is State Dispatch at (916) 445-0045.
11. The Sacramento Fish and Wildlife Office and CDFG must be notified in writing within three working days of the accidental death or injury to a San Joaquin kit fox during project related activities.

14-6.02D Payment

Not Used

Replace 2nd paragraph of section 14-8.02A with:

Do not exceed 86dBA LMax at 50 feet from the job site activities from 7:00 p.m. to 7:00 a.m. This requirement in no way relieves the Contractor from responsibility for complying with local ordinances regulating noise level.

The City of Tracy General Plan Noise Element must be followed and noise reducing construction practices must be implemented as minimization measures where construction-related noise impacts would be likely to occur. Objective N-1.2 of the General Plan is meant to control sources of excessive noise and Policy 4 deals directly with construction noise. Comply with the City of Tracy General Plan Noise Element –Objective N-1.2, Policy 4, including:

- All construction in the vicinity of noise sensitive land uses, such as residences, hospitals, or convalescent homes, must be limited to daylight hours or 7:00 AM to 7:00 PM.
- All internal combustion engine-driven equipment must be equipped with intake and exhaust mufflers that are in good condition and appropriate for the equipment.
- Stationary noise-generating equipment must be located as far as possible from sensitive receptors when sensitive receptors adjoin or are near a construction area.
- “Quiet” air compressors and other stationary noise sources must be utilized where technology exists.

Prohibit unnecessary idling of internal combustion engines within 100-ft of residences.

Locate all stationary noise-generating construction equipment, such as air compressors, portable power generators, or self-powered lighting systems as far as possible from noise sensitive residences.

Noise-generating construction activities must be restricted to the hours between 7:00 a.m. to 7:00 p.m. on Monday through Friday and 9:00 A.M. to 6:00 P.M. on Saturday and Sunday. If work is necessary outside of these hours, the contractor must implement a construction noise monitoring program and, if feasible, provide additional minimization measures as necessary (in the form of noise control blankets, temporary noise barriers, or other noise minimizing or dampening techniques appropriate for the situation) for affected receptors.

Equip all internal combustion engine driven equipment with intake and exhaust mufflers that in good condition and appropriate for the equipment.

Utilize “quiet” air compressors and other “quiet” equipment where such technology exists.

The noise level requirement must apply to the equipment on the job or related to the job, including but not limited to trucks, transit mixers or transient equipment that may or may not be owned by the Contractor. The use of loud sound signals must be avoided in favor of light warnings except those required by safety laws for the protection of personnel.

The contractor must prepare a detailed construction plan identifying the schedule for major noise and vibration-generating construction activities, and distribute this plan to City of Tracy Public Works and adjacent noise-sensitive receptors prior to performing any construction activities. The construction plan will describe potential noise impacts and vibration effects (in layman's terms). The construction plan must also list the construction noise reduction measures proposed and a contact number to call for questions and/or concerns.

Add to section 14-9.02A:

All construction machinery and vehicles must be properly tuned. Any machinery or vehicle when not in use must not be idled unnecessarily.

Replace section 14-11.03 with:

14-11.03 MATERIAL CONTAINING HAZARDOUS WASTE CONCENTRATIONS OF AERIALLY DEPOSITED LEAD

14-11.03A General

14-11.03A(1) Summary

Section 14-11.03 includes specifications for hazardous waste management while excavating, stockpiling, transporting, placing, and disposing of material containing hazardous waste concentrations of Aerially Deposited Lead (ADL).

ADL is present within the project limits.

14-11.03A(2) Definitions

Type Y-1: Material that contains ADL in average concentrations (using the 90 percent Upper Confidence Limit) of 1.5 mg/L or less extractable lead (based on a modified waste extraction test using deionized water as the extractant) and 1,411 mg/kg or less total lead. This material is a California hazardous waste that may be reused as permitted under the variance of the DTSC provided that the lead contaminated soil is placed a minimum of 5 feet above the maximum historic water table elevation and covered with at least 1 foot of non-hazardous soil.

Type Y-2: Material that contains ADL in average concentrations (using the 90 percent Upper Confidence Limit) that exceed either 1.5 mg/L extractable lead (based on a modified waste extraction test using deionized water as the extractant) or 1,411 mg/kg total lead but are less than 150 mg/L extractable lead (based on a modified waste extraction test using deionized water as the extractant) and less than 3,397 mg/kg of total lead. This material is a California hazardous waste that may be reused as permitted under the variance of DTSC provided that the lead contaminated soil is placed a minimum of 5 feet above the maximum historic water table elevation and protected from infiltration by a pavement structure which will be maintained by the Department.

Type Z-2: Material that contains ADL in average concentrations (using the 95 percent Upper Confidence Limit) greater than or equal to 1,000 mg/kg total lead, greater than or equal to 5.0 mg/L soluble lead (as tested using the California Waste Extraction Test), and the material is surplus; or material that contains ADL in average concentrations greater than 150 mg/L extractable lead (based on a modified waste extraction test using deionized water as the extractant) or greater than 3,397 mg/kg total lead. This material is a Department-generated California hazardous waste and must be transported to and disposed of at a California Class I disposal site.

Type Z-3: Material that contains ADL in average concentrations (using the 95 percent Upper Confidence Limit) greater than 5.0 mg/L soluble lead, (as tested using the Toxicity Characteristic Leaching Procedure). This material is a Department-generated federal hazardous waste and must be transported to and disposed of at a CA Class I disposal site.

14-11.03A(3) Site Conditions

The complete site investigation report is included in the *Information Handout*.
Type Z-2 material as shown.

14-11.03A(4) Submittals

14-11.03A(4)(a) Lead Compliance Plan

Submit a lead compliance plan under section 7-1.02K(6)(j)(ii).

14-11.03A(4)(b) Excavation and Transportation Plan

Within 15 days after approval of the Contract, submit 3 copies of an excavation and transportation plan. Allow 7 days for review. If revisions are required, as determined by the Engineer, submit the revised plan within 7 days of receipt of the Engineer's comments. For the revision, allow 5 days for the review. Minor changes to or clarifications of the initial submittal may be made and attached as amendments to the excavation and transportation plan. In order to allow construction to proceed, the Engineer may conditionally approve the plan while minor revisions or amendments are being completed.

Prepare the written, project specific excavation and transportation plan establishing the procedures you will use to comply with requirements for excavating, stockpiling, transporting, and placing or disposing of material containing ADL. The plan must comply with the regulations of the DTSC and Cal/OSHA and the requirements of the variance. The sampling and analysis portions of the excavation and transportation plan must meet the requirements for the design and development of the sampling plan, statistical analysis, and reporting of test results contained in US EPA, SW 846, "Test Methods for Evaluating Solid Waste," Volume II: Field Manual Physical/Chemical, Chapter Nine, Section 9.1. The plan must include the following elements:

1. Excavation schedule by location and date
2. Temporary locations of stockpiled material
3. Dust control measures
4. Air monitoring. Include the following information:
   - 4.1. Location and type of equipment
   - 4.2. Sampling frequency
   - 4.3. Name and address of the accredited laboratory where the analysis was performed
5. Transportation equipment and routes
6. Method for preventing spills and tracking material onto public roads
7. Truck waiting and staging areas
8. Site for disposal of hazardous waste

14-11.03A(4)(c) Burial Location Report

Not Used

14-11.03A(4)(d) Bill of Lading

14-11.03A(5) Quality Control and Assurance

Excavation, reuse, and disposal of material with ADL must comply with rules and regulations of the following agencies:

1. US DOT

2. US EPA
3. California Environmental Protection Agency
4. CDPH
5. DTSC
6. Cal/OSHA
7. California Department of Resources Recycling and Recovery
8. RWQCB, Region 5S, Central Valley
9. State Air Resources Control Board
10. San Joaquin Valley Air Quality Management District

Transport and dispose of material containing hazardous levels of lead under federal and state laws and regulations and county and municipal ordinances and regulations. Laws and regulations that govern this work include:

1. Health & Safety Code, Division 20, Chp 6.5 (California Hazardous Waste Control Act)
2. 22 CA Code of Regs, Div. 4.5 (Environmental Health Standards for the Management of Hazardous Waste)
3. 8 CA Code of Regs

14-11.03B Materials

Not Used

14-11.03C Construction

14-11.03C(1) General

Not Used

14-11.03C(2) Material Management

Transport excavated Type Z–2 material using:

1. Hazardous waste manifest
2. Hazardous waste transporter with a current DTSC registration certificate and CA Highway Patrol (CHP) Biennial Inspection of Terminals (BIT) Program compliance documentation.

14-11.03C(3) Dust Control

Excavation, transportation, placement, and handling of material containing ADL must result in no visible dust migration. A water truck or tank must be on the job site at all times while clearing and grubbing and performing earthwork operations in work areas containing ADL. Apply water to prevent visible dust.

14-11.03C(4) Surveying Type Y–1 or Y–2 Material Burial Locations

Not Used

14-11.03C(5) Material Transportation

Before traveling on public roads, remove loose and extraneous material from surfaces outside the cargo areas of the transporting vehicles and cover the cargo with tarpaulins or other cover, as outlined in the approved Excavation and Transportation Plan. You are responsible for costs due to spillage of material containing lead during transport. Transportation routes for Type Y-1 or Y-2 material must only include the highway.

14-11.03C(6) Disposal

14-11.03D Payment

Payment for a lead compliance plan is not included in the payment for environmental stewardship work.

The Department does not pay for stockpiling of material containing ADL unless the stockpiling is ordered. No payment for sampling and analysis will be made unless it is ordered. The Department does not pay for additional sampling and analysis required by the receiving landfill.

Sampling, analyses, and reporting of results for surplus material not previously sampled is change order work.

Replace section 14-11.06 with:

14-11.06 CONTAMINATED GROUNDWATER AND SOIL DUE TO CAM 17 METALS

14-11.06A General

14-11.06A(1) Summary

Due to CAM17 metals the groundwater may only be discharged into sanitary sewer or a retention pond, not into the storm drain system. You may coordinate discharging water into the Westside Irrigation District canal if authorized by the WSID. You are responsible for coordinating with WSID. If WSID does not allow you to discharge water into their canal, the groundwater may only be discharged into sanitary sewer or a retention pond.

Section 14-11.06 includes specifications for handling petroleum and metal impacted soil and water during excavation activities and from general construction operations. Impacted soil may be encountered through general excavation activities, retention basin excavation, pipe installations and construction of CIDH concrete piling.

14-11.06A(2) Definitions

Not Used

14-11.06A(3)Site Conditions

Expected groundwater depth ranges from approximately 9-18 feet below ground surface, and is dependent on weather and agriculture. Perched groundwater conditions may exist at shallower depths.

Concentration ranges for metals and organic compounds are shown in the following tables.

Concentrations (mg/kg) CAM 17 Metals Constituents of Concern in Soil

Metal	Antimony	Arsenic	Barium	Beryllium	Cadmium	Chromium	Cobalt	Copper	Lead	Mercury	Molybdenum	Nickel	Selenium	Silver	Thallium	Vanadium	Zinc
Minimum	<2.0	1.3	91	<1.0	<1.0	14	4.5	12	5.1	<0.10	<1.0	19	<1.0	<1.0	<1.0	17	27
Maximum	<2.0	13	300	<1.0	<1.0	31	11	33	500	0.29	1.1	40	<1.0	<1.0	<1.0	35	94

Notes:

mg/kg = milligrams per kilogram

< = Not detected above the stated laboratory reporting limit

Concentrations of Organic Compounds in Soil								
Compound	TPHd (mg/kg)	TPHmo (mg/kg)	TPHg (mg/kg)	BTEX (ug/kg)	MTBE (ug/kg)	Pesticides (ug/kg)	Herbicides (ug/kg)	PAHs (ug/kg)
Minimum	<1.0	<1.0	<1.0	ND	<5.0	ND	ND	ND
Maximum	2,800	4,700	<1.0	ND	<5.0	4,4'-DDD=11 4,4'-DDE=23 4,4'-DDT=40 alpha-Chlordane=2.1 gamma-Chlordane=3.3 Chlordane=20 Dieldrin=7.6	ND	ND

Notes:
mg/kg = milligrams per kilogram
µg/kg = micrograms per kilogram
TPHg = Total petroleum hydrocarbons as gasoline
TPHd = Total petroleum hydrocarbons as diesel
TPHmo = Total petroleum hydrocarbons as motor oil
BTEX = Benzene, toluene, ethylbenzene, and xylenes
MTBE = Methyl tert-butyl ether
PAHs = Poly-Aromatic Hydrocarbons
< = Not detected above the stated laboratory reporting limit
ND = None detected

Concentrations (mg/l) of CAM 17 Metals in Groundwater																	
Metal	Antimony	Arsenic	Barium	Beryllium	Cadmium	Chromium	Cobalt	Copper	Lead	Mercury	Molybdenum	Nickel	Selenium	Silver	Thallium	Vanadium	Zinc
Minimum	<0.025	0.17	3.6	<0.015	0.02	1.0	0.31	0.78	0.26	0.0015	<0.025	1.2	<0.050	<0.015	<0.075	1.2	1.6
Maximum	0.098	1.0	39	<0.015	0.14	7.0	2.4	6.5	2.3	0.0068	<0.025	7.4	<0.050	<0.015	<0.075	8.4	11

Notes:
mg/l = milligrams per liter
< = Not detected above the stated laboratory reporting limit

Concentrations of Organic Compounds in Groundwater					
Compound	TPHg (mg/l)	TPHd (mg/l)	TPHmo (mg/l)	BTEX (ug/l)	MTBE (ug/l)
Minimum	<0.050	<0.050	0.052	ND	<0.50
Maximum	0.050	<0.050	0.052	ND	<0.50

Notes:
mg/l = milligrams per kilogram
ug/l = micrograms per kilogram
TPHg = Total petroleum hydrocarbons as gasoline
TPHd = Total petroleum hydrocarbons as diesel
TPHmo = Total petroleum hydrocarbons as motor oil
BTEX = Benzene, toluene, ethylbenzene, and xylenes
MTBE = Methyl tert-butyl ether
< = Not detected above the stated laboratory reporting limit
ND = None detected

14-11.06A(4) Submittals

14-11.06A(4)(a) Health and Safety Plan

Submit a site specific health and safety plan, signed by a CIH, for site personnel for acceptance. Identify potential health and safety hazards associated with work involving CAM17 metals impacted soil and CAM17 metals impacted groundwater that will be used to protect workers from those hazards in conformance with Title 8 and 22 of the CA Code of Regs. The health and safety plan must:

1. Identify key site safety personnel
2. Describe risks associated with the work

3. Specify training requirements
4. Specify appropriate personal protective equipment
5. Specify site-specific medical surveillance requirements
6. Specify air monitoring requirements
7. Define appropriate site work zones
8. Specify decontamination requirements

14-11.06A(4)(b) Safety Training Certification

Provide a certification of completion of the safety training program to personnel and submit copies as an informational submittal.

14-11.06A(4)(c) Excavation and Dewatering Plan

Submit an excavation and dewatering plan for the excavation and stockpiling of excavated soil, and the dewatering and disposal of CAM17 impacted water.

The plan must comply with Cal/OSHA regulations. The excavation and dewatering plan must include the following elements:

1. Excavation and stockpile schedule by locations and date and estimates of quantity to be stockpiled
2. Temporary locations of stockpiled material and stockpile management and procedures
3. Storage containers
4. Dust control measures
5. Dewatering methods and procedures
6. Dewatering equipment and containers
7. Name and address of the California permitted facility where the CAM17 impacted water will be taken.

14-11.06A(4)(d) Groundwater Laboratory Analytical Results

Submit analytical test results of the CAM17-impacted groundwater, including chain of custody documentation, before removing the water from the job site.

14-11.06A(4)(e) Disposal Documentation

Submit documentation of proper disposal from the receiving disposal facility within 5 business days of impacted soil and groundwater transport from the job site.

14-11.06A(5) Notifications

Not used.

14-11.06A(6) Quality Control and Assurance

Laboratories used to perform groundwater analyses must be certified by the CDPH Environmental Laboratory Accreditation Program (ELAP) for all analyses to be performed.

Excavation, handling, and management of the impacted soil, groundwater and management and disposal of impacted soil and groundwater must comply with the requirements of the following agencies:

1. Central Valley RWQCB
2. San Joaquin County Air Pollution Control District (SJCAPCD)
3. CAUOSHA
4. San Joaquin County Environmental Health Department (SJC/EHD)
5. DTSC

Laws and regulations that govern this work include:

1. Water Code, Division 7
2. Title 8, CA Code of Regs
3. Title 22, CA Code of Regs

14-11.06B Materials

Not Used

14-11.06C Construction

14-11.06C(1)General

Not Used

14-11.06C(2) Health and Safety Training Program

Before starting any activity that presents the potential for metals exposure to employees including Department employees, provide a safety training program to these employees that communicates potential health and safety hazards associated with work involving CAM17 impacted soil and groundwater and instructs personnel in procedures for doing the work safely. Provide subsequent training required until completion of work. The level of training provided must be consistent with the person's job function and must conform to OSHA and CALOSHA regulations.

Supply training, personnel protective equipment, and medical surveillance required by the health and safety plan to 5 Department employees.

Continuously monitor the excavation site as it is excavated, using appropriate air monitoring devices consistent with the health and safety plan.

14-11.06C(3) Dewatering

You are responsible for dewatering activities and management of the CAM17-impacted groundwater generated. During investigations performed in 2007 and 2012 groundwater was encountered at 9 to 18 feet below ground surface. If groundwater or perched groundwater is encountered during excavation activities immediately notify the Engineer.

Conduct a daily inspection of the dewatering equipment, when in use, to ensure that all components are functional and routinely maintained to prevent leakage. Should any component of the dewatering equipment be damaged or affect the performance of the equipment, immediately discontinue the dewatering operation and repair the component or replace it with substitute equipment.

Comply with the provisions of the NPDES General Permit for *Storm Water Discharges Associated with Construction and Land Disturbance Activities (Order No. 2009-0009-DWQ, NPDES No. CAS000002)*. You are responsible for penalties assessed or levied on you or the Department as a result of your failure to comply with the provisions in this section and as specified in section 7-1 and section 19-3.

14-11.06C(4) Disposal

You may dispose up to 25,000 gallons of water or water for a continual period of three months from the first day water is disposed of in the City's sewer system whichever occurs first. You may not discharge any water from the CIDH pile dewatering into the sewer system.

You must test the water and provide documentation that the disposed water to be discharged into in the City's sewer system meets all threshold limits prior to disposing of said water into the sewer system.

For water encountered in excess of limits stated above or from the CIDH pile dewatering, you must dispose of the water at an appropriate California permitted facility after laboratory analysis results are accepted.

Collect and dispose of used non-reusable protective equipment at an appropriately permitted disposal facility.

14-11.06D Payment

Payment for testing, analysis, monitoring, reporting, handling, removal, and disposal of groundwater and soil is included in the payment for the type of excavation and drilling work involved.

Replace "Reserved" in section 14-11.08 with:

14-11.08A General

Section 14-11.08 includes specifications relating to the disturbance of existing paint systems.

The existing paint on the steel girders on the existing bridge contain lead. Any work that disturbs the existing paint system exposes workers to health hazards and produces:

1. Debris containing heavy metal in amounts that exceed the thresholds established in 8 CA Code of Regs and 22 CA Code of Regs. This debris is a Department-generated hazardous waste.
2. Toxic fumes when heated.

Grime and detritus already on the bridge before the start of work may also contain lead. Consider this grime and detritus part of the existing paint system. The Department is the hazardous waste generator if the Engineer accepts waste-characterization test results demonstrating that the debris is a hazardous waste.

Contain all debris produced when the existing paint system is disturbed. If containment measures are inadequate to contain and collect debris produced when the existing paint system is disturbed, stop the work and do not perform additional work until:

1. Revised debris containment and collection plan has been authorized
2. Released material has been collected and contained

Handle, store, transport, and dispose of debris produced when the existing paint system is disturbed under applicable federal, state, and local hazardous waste laws.

14-11.08B Submittals

14-11.08B(1) General

Not Used

14-11.08B(2) Debris Containment and Collection Plan

Submit a debris containment and collection plan. The plan must:

1. Identify materials, equipment, and methods to be used when the existing paint system is disturbed
2. Include shop drawings of:
   - 2.1. Containment systems complying with section 59-2.03B(3)
   - 2.2. Components that provide ventilation, air movement, and visibility for worker safety
3. Include the name and location of the analytical laboratory that will perform the analyses
4. Identify the hazardous waste transporter that will haul the debris and provide documentation of
   - 4.1 Current DTSC registration
   - 4.2 Compliance with the CA Highway Patrol Biennial Inspection of Terminals Program
5. Include the name and location of the disposal facility that will accept the hazardous waste

Allow 10 days for review.

If required, submit a revised debris containment and collection plan.

14-11.08B(3) Lead Compliance Plan

Submit a lead compliance plan under section 7-1.02K(6)(j)(ii).

14-11.08B(4) Air Monitoring Reports

Air monitoring reports, including test results for samples taken after corrective action, must be prepared by the CIH and submitted:

1. Verbally within 48 hours after sampling
2. As an informational submittal within 5 days after sampling

Air monitoring reports must include:

1. Date and location of sample collection, sample number, contract number, bridge number, full name of the structure, and District-County-Route-Post mile
2. Name and address of the certified laboratory that performed the analyses
3. Chain of custody documentation
4. List of emission control measures in place when air samples were taken
5. Air sample results compared to the appropriate permissible exposure limit (PEL)
6. Corrective action recommended by the CIH to ensure exposure to airborne metals outside containment systems and work areas is within specified limits
7. Signature of the CIH who reviewed the data and made recommendations

14-11.08B(5) Soil Sampling Results for Debris Containment Verification

Submit test results of soil analysis verifying debris containment, including results for soil samples taken after corrective action:

1. Verbally within 48 hours after sampling
2. Within 5 days after sampling

Soil sampling results must include:

1. Date and location of sample collection, sample number, contract number, bridge number, full name of the structure and District-County-Route-Post mile
2. Concentrations of heavy metals expressed in mg/kg and mg/L
3. Name and address of the certified laboratory that performed the analyses
4. Chain of custody documentation

14-11.08B(6) Waste-Characterization Test Results

Submit waste-characterization test results for the debris and chain of custody documentation before:

1. Requesting the Engineer’s signature on the disposal facility's waste profile document
2. Requesting a generator's EPA Identification Number
3. Removing the debris from the site

14-11.08B(7) Request for U.S. Environmental Protection Agency Identification Number

Submit a request for the generator's EPA Identification Number when the Engineer accepts waste-characterization test results documenting that the debris is a hazardous waste.

14-11.08B(8) Disposal Documentation

Submit documentation from the receiving landfill or recycling facility confirming proper disposal within 5 business days of transporting debris from the project.

14-11.08C Safety and Health Provisions

14-11.08C(1) General

Comply with 8 CA Code of Regs, including § 1532.1.

14-11.08C(2) Protective Work Clothing and Washing Facilities

Supply clean protective work clothing for 5 Department personnel:

1. Whenever there is possible exposure to heavy metals or silica dust
2. During application of paint undercoats

Replace protective work clothing as needed.

Protective work clothing and washing facilities must be inspected and authorized for use by Department personnel before starting any activity with the potential for lead exposure.

Protective work clothing remains your property upon completion of the Contract.

14-11.08D Work Area Monitoring

14-11.08D(1) General

Monitor the ambient air and soil in and around the work area to verify the effectiveness of the containment system. Work area monitoring includes:

1. Collecting, analyzing, and reporting air and soil test results
2. Recommending corrective action when specified air or soil concentrations are exceeded

Collect air and soil samples at locations designated by the Engineer.

14-11.08D(2) Air Monitoring

Air monitoring must be performed under the direction of a CIH.

Collect and analyze air samples to detect lead under the National Institute of Occupational Safety and Health (NIOSH) Method 7082 using a detection limit of at least 0.05 $\mu g/m^3$. Collect and analyze air samples to detect other metals under NIOSH Method 7300 using a detection limit of at least 1 percent of the appropriate PEL specified by Cal/OSHA. You may use alternative methods of sampling and analysis with equivalent detection limits.

Concentrations of airborne metals outside containment systems and work areas must not exceed any of the following:

1. Average of 1.5 µg/m3 of air per day and 0.15 µg/m3 per day on a rolling 90-day basis. Calculate average daily concentrations based on monitoring to date and projections based on monitoring trends for the next 90 days or to the end of work subject to the lead compliance plan if less than the specified averaging period.
2. 10 percent of the action level specified for lead by 8 CA Code of Regs §1532.1.
3. 10 percent of the appropriate PELs specified for other metals by Cal/OSHA.

Collect air samples daily during work activities that disturb the existing paint system. Air samples must be analyzed within 48 hours by a facility accredited by the Environmental Lead Laboratory Accreditation Program of the American Industrial Hygiene Association. If concentrations of airborne metals exceed allowable levels, modify the containment system or work activities to prevent further release of metals. If the CIH recommends corrective action, collect and analyze additional samples after implementing the corrective action unless directed otherwise.

In areas without exposed soil, the concentrations of heavy metals in the work area must not increase when the existing paint system is disturbed. Any visible increase in the concentrations of heavy metals must be removed.

14-11.08E Debris Management

14-11.08E(1) Debris Storage

Debris produced when the existing paint system is disturbed must not be temporarily stored on the ground. Before the end of each work shift, remove accumulated debris from the containment system. Store the debris as a hazardous waste.

14-11.08E(2) Debris Waste Characterization

Perform waste characterization testing on the debris as required by the disposal facility including:

1. Total Lead by US EPA Method 6010B
2. Soluble Lead by California Waste Extraction Test (CA WET)
3. Soluble Lead by Toxicity Characteristic Leaching Procedure (TCLP)

From the first 220 gal of hazardous waste or portion thereof, if less than 220 gal of hazardous waste are produced, a minimum of 4 randomly selected samples must be taken and analyzed individually. Samples must not be composited. From each additional 880 gal of hazardous waste or portion thereof, if less than 880 gal are produced, a minimum of 1 additional random sample must be taken and analyzed.

Use chain of custody procedures consistent with chapter 9 of US EPA Test Methods for Evaluating Solid Waste, Physical/Chemical Methods (SW-846) while transporting samples from the job site to the analytical laboratory. The laboratory must be certified by the CDPH's Environmental Laboratory Accreditation Program (ELAP) for all analyses to be performed.

Before performing the analyses, the laboratory must homogenize each sample. The homogenization process must not include grinding of the samples. A sample aliquot must be:

1. Obtained in an amount large enough for all analyses to be performed
2. Homogenized a 2nd time
3. Used for the total and soluble analyses after the 2nd homogenization

14-11.08E(3) Debris Transport and Disposal

14-11.08E(3)(a) General

For bidding purposes, assume the debris is a hazardous waste.

14-11.08E(3)(b) Hazardous Waste Debris

After the Engineer accepts the waste-characterization test results, dispose of the debris:

1. Within 30 days after accumulating 220 lbs. of debris
2. At an appropriately permitted Class I facility located in California

Make all arrangements with the operator of the disposal facility.

If less than 220 lbs. of hazardous waste is generated in total, dispose of it within 30 days after the start of accumulation of the debris.

Use a hazardous waste manifest and a transporter using vehicles with current DTSC registration certificate when transporting hazardous waste. The Engineer provides the generator's EPA Identification Number and signs all manifests as the hazardous waste generator within 2 business days of accepting the waste-characterization test results and receiving your request for the generator's EPA Identification Number.

14-11.08E(3)(c) Nonhazardous Waste Debris

If waste characterization test results demonstrate that the debris is a nonhazardous waste and the Engineer accepts the results, dispose of the debris at an appropriately permitted CA Class II or CA Class III facility or recycle it. Make all arrangements with the operator of the disposal facility and comply with the facility's requirements.

You may dispose of nonhazardous debris at a facility equipped to recycle the debris if:

1. Copper slag abrasive blended by the supplier with a calcium silicate compound is used for blast cleaning.
2. You make all arrangements with the recycling facility's operator and perform any facility-required testing of the debris.

The Department does not adjust payment for disposal of nonhazardous debris at a recycling facility.

Replace section 14-11.09 with:

14-11.09 TREATED WOOD WASTE

14-11.09A General

14-11.09A(1) Summary

Section 14-11.09 includes specifications for handling, storing, transporting, and disposing of Treated Wood Waste (TWW).

Wood removed from the metal beam guard railing, roadside signs, timber piling, and timber bridge(s) are TWW. Manage TWW under 22 CA Code of Regs, Div. 4.5, Chp. 34.

14-11.09A(2) Submittals

For disposal of TWW, submit as an informational submittal a copy of each completed shipping record and weight receipt within 5 business days.

14-11.09B Materials

Not Used

14-11.09C Construction

14-11.09C(1) General

14-11.09C(2) Training

Provide training to personnel who handle TWW or may come in contact with TWW. Training must include:

1. All applicable requirements of 8 CA Code of Regs
2. Procedures for identifying and segregating TWW
3. Safe handling practices
4. Requirements of 22 CA Code of Regs, Div. 4.5, Chp. 34
5. Proper disposal methods

Maintain records of personnel training for 3 years.

14-11.09C(3) Storage

Store TWW before disposal using the following methods:

1. Elevate on blocks above a foreseeable run-on elevation and protect from precipitation for no more than 90 days.
2. Place on a containment surface or pad protected from run-on and precipitation for no more than 180 days.
3. Place in water-resistant containers designed for shipping or solid waste collection for no more than 1 year.
4. Place in a storage building as defined in 22 CA Code of Regs, Div. 4.5, Chp. 34, § 67386.6(a)(2)(C).

Prevent unauthorized access to TWW using a secured enclosure such as a locked chain link fenced area or a lockable shipping container located within the job site.

Resize and segregate TWW at a location where debris from the operation including sawdust and chips can be contained. Collect and manage the debris as TWW.

Provide water-resistant labels that comply with 22 CA Code of Regs, Div. 4.5, Chp. 34, §67386.5, to clearly mark and identify TWW and accumulation areas. Labels must include:

1. Caltrans, District number, Construction, Construction Contract number
2. District office address
3. Engineer's name, address, and telephone number
4. Contractor's contact name, address and telephone number
5. Date placed in storage

14-11.09C(4) Transporting and Disposal

Before transporting TWW, obtain an agreement from the receiving facility that the TWW will be accepted. Protect shipments of TWW from loss and exposure to precipitation. For projects with 10,000 pounds or more of TWW, request a US EPA Generator Identification Number from the Engineer at least 5 business days before the first shipment. Each shipment must be accompanied by a shipping record such as a bill of lading or invoice that includes:

1. Caltrans with district number
2. Construction Contract number
3. District office address
4. Engineer's name, address, and telephone number
5. Contractor's contact name and telephone number
6. Receiving facility name and address
7. Waste description: Treated Wood Waste with preservative type if known or unknown/mixture
8. Project location
9. Estimated quantity of shipment by weight or volume
10. Date of transport
11. Date of receipt by the receiving TWW facility
12. Weight of shipment as measured by the receiving TWW facility
13. For projects with 10,000 pounds or more of TWW include the USA EPA Generator Identification Number.

The shipping record must be at least a 4-part carbon or carbonless 8 1/2 by 11-inch form to allow retention of copies by the Engineer, transporter, and disposal facility.

Dispose of TWW at an approved TWW facility. A list of currently approved TWW facilities is available at:

http://www.dtsc.ca.gov/HazardousWaste/upload/lanfillapr11pdated1.pdf

Dispose of TWW within:

1. 90 days of generation if stored on blocks
2. 180 days of generation if stored on a containment surface or pad
3. 1 year of generation if stored in a water-resistant container, or within 90 days after the container is full, whichever is shorter
4. 1 year of generation if storing in a storage building as defined in 22 CA Code of Regs, Div. 4.5, Chp. 34, § 67386.6(a)(2)(C)

14-11.09D Payment

Not Used

Replace section 14-11.11 with:

14-11.11 MANAGEMENT OF ASBESTOS CONTAINING MATERIALS

14-11.11A General

14-11.11A(1) Summary

Section 14-11.11 includes specifications for surveying and sampling or, removal, and disposal of asbestos-containing material (ACM). Friable ACM generated as part of this work is Department-generated hazardous waste under 14-11.02F.

14-11.11A(2) Definitions

asbestos: Includes chrysotile, amosite, crocidolite, tremolite, anthrophyllite, actinolite and any of these minerals that has been chemically treated and/or altered.

asbestos-containing material (ACM): Any building material, including asbestos cement pipe containing commercial asbestos in an amount greater than 1% by weight, area, or count.

certified asbestos consultant (CAC): An asbestos consultant certified by Cal/OSHA under 8 CA Code of Regs § 341.15 and 1529.

regulated asbestos-containing material (RACM): any material containing more than one percent friable asbestos as determined using Polarized Light Microscopy (PLM), that, when dry, can be crumbled, pulverized, or reduced to powder by hand pressure. Includes Category I non-friable ACM which has become friable, or will be subjected to sanding, grinding, cutting or abrading; or Category II non-friable ACM which may become or has become friable.

friable ACM: Any material containing more than 1 percent asbestos by area that hand pressure can crumble, pulverize or reduce to powder when dry".

non-friable ACM: Asbestos fibers are tightly bound into the matrix of the material and should not become an airborne hazard as long as the material remains intact and undamaged, and is not sawed, sanded, drilled or otherwise abraded during removal (Asbestos Hazard Emergency Response Act (AHERA).

14-11.11A(4) Submittals

14-11.11A(4)(a) Asbestos Surveying Work Plan for Sampling

Before starting removal or renovation, submit an asbestos inspection work plan that establishes the procedures to comply with requirements for asbestos surveying and sampling. The plan must be prepared and signed by a CAC and include:

1. Sampling procedures. ACM sampling methods must meet USEPA, SW-846, "Test Methods for Evaluating Solid Waste," Volume II: Field Manual, Physical/Chemical, Chapter Nine Section 9.1. Include the name of the laboratory that will perform the asbestos analyses and a copy of the laboratory's Environmental Laboratory Accreditation Program (ELAP) certification.
2. Analytical method for analyses. Samples must be analyzed for asbestos according to Analytical Method 600/R-93-116 under 40 CFR Part 763 Subpart F, Appendix A (Polarized Light Microscopy).
3. Sample handling and preservation. Transport samples under chain of custody to the laboratory within 24 hours of sampling. The laboratory must test the samples within 48 hours. Submit laboratory results as soon as they are available. Supply a summary report of sampling protocols, photographs of the structures and of the locations where samples were taken, chain of custody, analysis and laboratory data sheets to the Engineer within 10 days of completion of sampling.

Under 40 CFR §61.145(a), thoroughly inspect regulated facility, including the concrete and any other suspect material is required before demolition or renovation. Do not start sampling and analysis work until

the work plan is authorized by the Engineer. If the work plan is unacceptable, it will be returned to you within 5 business days of the submittal for revision. Revise the plan within 5 business days and resubmit. The Engineer has 5 days to review and authorize or reject the revised plan from the date the revised plan is received. Sampling and analysis must comply with USEPA "Asbestos/NESHAP Regulated Asbestos Containing Materials Guidance."

Collect a minimum of 1 sample for each suspected ACM location. For pipes and other linear components of suspected ACM, collect samples sufficient to determine suspected asbestos content of the material. Sample all exposed suspected ACM on the structure. If bridge concrete will be disturbed, sample concrete based on color, texture and the type of structure portion to be impacted (deck, railing, etc.) Sample suspected ACM encapsulated in concrete when exposed during demolition.

14-11.11A(4)(b) Asbestos Sampling and Analysis Report

Submit a report on the asbestos inspection within 10 days after completion of the inspection. The report must include:

1. Sampling protocols
2. Photographs of the structures and of the locations where samples were taken
3 Assessment of condition of ACM (friable/non-friable)
4. Quantification of ACM
5. Recommendations for removal and disposal of confirmed ACM.
6. Chain of custody
7. Laboratory data
8. Documentation that report was prepared by Cal-OSHA Certified CAC.

Allow 5 business days for the Engineer to review and authorize the report. Make any changes requested for acceptance within business 5 days. Submit 2 copies of the final report.

14-11.11A(4)(c) Air Quality Management District (AQMD) or Air Pollution Control District (APCD) Notification of Demolition

Submit a copy of the NESHAP notification form and attachments to Engineer, required under section 14-9.02, before submittal to the AQMD or APCD under 40 CFR §61.145(b).

14-11.11A(4)(d) Asbestos Compliance Plan

Prepare an Asbestos Compliance Plan (ACP) to prevent or minimize exposure to asbestos during removal work. The ACP must be signed by a CIH before submission to the Engineer for review and authorization. Submit the ACP to the Engineer at least 15 business days before beginning removal work in areas containing or suspected to contain asbestos. The ACP must contain:

1. Identification of key personnel for the project
2. Scope of work and equipment that will be used
3. Job hazard analysis for work assignments
4. Summary of risk assessment
5. Personal protective equipment
6. Delineation of work zones on-site
7. Decontamination procedures
8. General safe work practices
9. Security measures
10. Emergency response plans
11. Worker training

12. Certification of completion of safety training for all trained personnel before starting work in areas containing or suspected to contain asbestos.

14-11.11A(4)(e) Removal Work Plan

Prepare a work plan for the removal, storage, transportation and disposal of ACM. Allow up to 10 days for Engineer to review and authorize.
The work plan must include:

1. Installing asbestos warning signs at perimeters of abatement work areas
2. Summary of methods and techniques for handling, packaging, labeling, storing, transporting and disposing of waste materials
3. Wetting asbestos materials with sprayers
4. Containing large volumes of asbestos materials in disposal bins for temporary storage until removed from the site
5. Providing manifests for disposal upon completion for the Engineer to sign
6. Providing transporters registered to transport hazardous waste in the state of California under the Health and Safety Code Ch 6.5, Div 20 and 22 CA Code of Regs, Div 4.5
7. Disposing of asbestos materials at an appropriately permitted disposal facility in California
8. Compliance with federal, state, and local requirements for asbestos work, transport, and disposal

14-11.11A(4)(f) ACM Removal Report

Submit ACM Removal Report to Engineer and APCD or AQMD within 30 days after ACM is removed from job site. ACM Removal Report must address all items in work plan.

14-11.11A(5) Quality Control and Assurance

14-11.11A(5)(a) Qualifications

The person in charge of asbestos removal and abatement planning must be a CAC.
The CAC in charge of asbestos removal must be registered under Labor Code § 6501.5 and certified under Bus & Prof Code § 7058.6.
Laboratories used to perform asbestos analysis must be certified by the CDPH Environmental Laboratory Accreditation Program for all analyses to be performed.

14-11.11A(5)(b) Regulatory Requirements

Codes which govern removal and disposal of materials containing asbestos include:

1. CA Health and Safety Code, Division 20, Chapter 6.5, Hazardous Waste Control
2. 8 CA Code of Regs, General Industry Safety Order 5208 Asbestos
3. 8 CA Code of Reg, § 1529 and 341
4. 22 CA Code of Regs, Division 4.5
5. Cal/OSHA, Part 26 (amended), of 29 CFR
6. 40 CFR, Part 61, subpart M

14-11.11B Materials

Not used

14-11.11C Construction

14-11.11C(1) General

Notify the APCD or AQMD of changes in work locations or conditions.
Before starting work in areas containing or suspected to contain asbestos, provide safety training to State personnel who may enter the work area that meets the requirements of 8 CA Code of Regs § 1529.

Provide training, personal protective equipment, and medical surveillance required by the Asbestos Compliance Plan to 3 City personnel.

14-11.11C(2) Unanticipated Suspected ACM discovered During Demolition or Excavation

If unanticipated ACM is discovered during demolition, stop portion of work in ACM area and notify the Engineer. You will be responsible for removing and disposing of the ACM.
Notify the APCD or the AQMD of changes to removal or demolition plans, including discovery of ACM during demolition, within 2 business days of the change.
Removal and disposal of ACM not identified in the ACM survey prior to demolition or renovation is change order work.

14-11.11C(3) Removal

Comply with 8 CA Code of Regs § 1529 and § 341. Remove friable ACM using the wetting method. Remove and handle all non-friable ACM to prevent breakage. The removal of ACM encased in concrete or other similar structural material is not required before demolition, but the ACM must be adequately wetted whenever exposed during demolition. Prevent visible emissions from all ACM removal activities.
Mark all regulated work areas with the following or equivalent warning:

DANGER

ASBESTOS

CANCER AND LUNG DISEASE HAZARD

AUTHORIZED PERSONNEL ONLY

14-11.11C(4) Packaging

Comply with 22 CA Code of Regs, Div 4.5, Chapter 12, Article 3 requirements for packaging and labeling removed ACM. Place removed ACM in approved containers (double ply, 0.06-inch minimum thickness, plastic bags) with caution labels affixed to bags. Caution labels must have conspicuous, legible lettering, that spells out the following or equivalent warning:

DANGER

CONTAINS ASBESTOS FIBERS

AVOID CREATING DUST

CANCER AND LUNG DISEASE HAZARD

Place removed materials containing asbestos directly into a covered, lockable roll off or drop box that has the same caution label affixed on all sides.

If hazardous waste is removed, submit a copy of the hazardous waste manifest for each shipment of hazardous waste. The Engineer will sign all manifests as the generator.

14-11.11C(5) Transportation

All haulers of friable ACM must have current registration with DTSC for transporting hazardous waste and must have a U.S. Environmental Protection Agency Identification Number (U.S. EPA I.D. Number). All vehicles used to transport hazardous waste material must carry a valid registration during transport. Transport non-friable (non-hazardous waste) ACM to the disposal facility with a shipping document or waste shipment record.

14-11.11C(6) Disposal

Dispose of friable and non-friable waste containing asbestos at a disposal facility permitted to accept the waste and that meets all the requirements specified by federal, state and local regulations. Notify the proper authorities at the disposal site in advance of delivery of ACM.
Submit documentation from disposal facility indicating proper disposal of all hazardous ACM waste and nonhazardous ACM waste within 5 days of transporting the waste from the job site.

14-11.11D Payment

Not Used

^^

15 EXISTING FACILITIES

Add to section 15-2.01A:

Existing fences must not be removed without written consent signed by the property owner and submitted to the County prior to the removal. Fences removed must be restored with in-kind or better materials located no closer than the edge of the right-of-way.

Add to section 15-2.01D:

Removing portions of previously abandoned monitoring wells that are in conflict with the project work are included in the payment for various items of work and no separate payment will be made to the Contractor for removing portions of previously monitoring abandoned wells.

Replace section 15-2.02B(3) with:

15-2.02B(3) Cold Planing Asphalt Concrete Pavement

15-2.02B(3)(a) General

At the locations listed below, schedule cold planing activities to ensure that cold planing, placement of HMA, and reopening the area to traffic is completed during the same work shift:

1. North MacArthur Drive

For locations not listed above, schedule cold planing activities so that not more than 7 days elapses between the time the pavement is cold planed and the HMA is placed.

At the locations listed above, if you do not complete HMA placement before opening the area to traffic, you must:

1. Construct a temporary HMA taper to the level of the existing pavement
2. Place HMA during the next work shift
3. Submit a corrective action plan that shows you will complete cold planing and placement of HMA in the same work shift. Do not restart cold planing activities until the Engineer approves the corrective action plan.

15-2.02B(3)(b) Materials

Use the same quality of HMA for temporary tapers that is used for the HMA overlay or comply with the specifications for minor HMA in section 39.

15-2.02B(3)(c) Construction

15-2.02B(3)(c)(i) General

Do not use a heating device to soften the pavement.

The cold planing machine must be:

1. Equipped with a cutter head width that matches the planing width. If the cutter head width is wider than the cold plane area shown, submit to the Engineer a request for using a wider cutter head. Do not cold plane unless the Engineer approves your request.

2. Equipped with automatic controls for the longitudinal grade and transverse slope of the cutter head and:
   2.1. If a ski device is used, it must be at least 30 feet long, rigid, and a 1-piece unit. The entire length must be used in activating the sensor.
   2.2. If referencing from existing pavement, the cold planing machine must be controlled by a self-contained grade reference system. The system must be used at or near the centerline of the roadway. On the adjacent pass with the cold planing machine, a joint-matching shoe may be used.
3. Equipped to effectively control dust generated by the planing operation
4. Operated so that no fumes or smoke is produced.

Replace broken, missing, or worn machine teeth.

15-2.02B(3)(c)(ii) Grade Control and Surface Smoothness

Furnish, install, and maintain grade and transverse slope references.

The depth, length, width, and shape of the cut must be as shown or as ordered. The final cut must result in a neat and uniform surface. Do not damage the remaining surface.

The completed surface of the planed asphalt concrete pavement must not vary more than 0.02 foot when measured with a 12-foot straightedge parallel with the centerline. With the straightedge at right angles to the centerline, the transverse slope of the planed surface must not vary more than 0.03 foot.

Where lanes are open to traffic, the drop-off of between adjacent lanes must not be more than 0.15 foot.

15-2.02B(3)(c)(iii) Temporary HMA Tapers

If a drop-off between the existing pavement and the planed area at transverse joints cannot be avoided before opening to traffic, construct a temporary HMA taper. The HMA temporary taper must be:

1. Placed to the level of the existing pavement and tapered on a slope of 30:1 (horizontal: vertical) or flatter to the level of the planed area
2. Compacted by any method that will produce a smooth riding surface

Completely remove temporary tapers before placing permanent surfacing.

Remove cold planed material concurrent with planing activities so that removal does not lag more than 50 feet behind the planer.

15-2.02B(3)(d) Payment

Payment for removal of pavement markers, thermoplastic traffic stripe, painted traffic stripe, and pavement marking within the area of cold planing is included in the payment for cold plane asphalt concrete pavement of the types shown in the Bid Item List.

Replace section 15-2.02C(2) with:

15-2.02C(2) Remove Traffic Stripes and Pavement Markings Containing Lead

Residue from removing traffic stripes and pavement markings contains lead from the paint or thermoplastic. The average lead concentrations are less than 1,000 mg/kg total lead and 5 mg/L soluble lead. This residue:

1. Is a nonhazardous waste
2. Does not contain heavy metals in concentrations that exceed thresholds established by the Health and Safety Code and 22 CA Code of Regs

3. Is not regulated under the Federal Resource Conservation and Recovery Act (RCRA), 42 USC § 6901 et seq.

Submit a lead compliance plan under section 7-1.02K(6)(j)(ii).

Payment for a lead compliance plan is not included in the payment for existing facilities work.

Payment for handling, removal, and disposal of pavement residue that is a nonhazardous waste is included in the payment for the type of removal work involved.

Replace section 15-2.02F with:

15-2.02F Remove Asphalt Concrete Dikes

Before removing the dike, cut the outside edge of the asphalt concrete on a neat line and to a minimum depth of 0.17 foot.

Replace "Reserved" in section 15-2.02M with:

15-2.02M Remove Concrete (Channel Lining)

Remove Concrete (Channel Lining) includes removing and disposing of the channel lining and all shrubs, stumps, and material encountered in the canal and adjacent to the concrete lining, and removal of concrete headwalls not paid for as a separate bid item as shown.

Work involving the West Side Irrigation District (WSID) canals must be done between November 1st and March 1st. You may coordinate with WSID for possible work outside of this work window. You are responsible for dewatering to complete the work.

Comply with Section 15-2.04F.

Payment for Silt Removal at the bottom of the canal and Dredged Material is included in the payment for “Roadway Excavation, Remove Silt (Unsuitable Material)” and “Roadway Excavation, Remove Dredged Material (Unsuitable Material)”.

Replace "Reserved" in section 15-2.02N with:

15-2.02N Remove Temporary Detour

Remove temporary detour once no longer required.

Payment includes removing and disposing of imported borrow (detour), Class 2 Aggregate Base (detour), Hot Mix Asphalt (Type A)(Detour), Temporary delineators, Temporary Railing (Type K) used for temporary detour, Temporary detour drainage system, Temporary Retaining Walls, Temporary Abutments including existing pile extensions 4’ below finished grade, temporary prefabricated steel truss bridge and asphalt concrete overlay, disassembling and return freight of prefabricated temporary steel truss bridge to supplier, Structural Concrete, Approach Slab (Detour), Temporary Crash Cushion, Pedestrian Railing (Detour), Protective Railing (Detour), and replacing in kind the portion of existing sidewalk impacted by detour and replacing in kind new sod damaged by the detour placement.

Payment for removal of the detour traffic control items are included as Traffic Control System or the various bid items of work.

Replace "Reserved" in section 15-2.02O with:

15-2.02O Remove Railing (Metal, Tubular)

Where removing railing (metal, tubular), remove and salvage any signs attached to the railings and deliver them to the engineer. The railings at the Heinz driveway must not be removed until bridge demolition begins. Comply with Section 15-2.04C for the sign located on the eastern railing of the Heinz driveway.

Replace "Reserved" in section 15-2.04C with:

15-2.04C Reconstruct Sign Structures

Prior to closing the Heinz driveway, you must reconstruct the sign attached to the eastern bridge railing directing the public to the storage facility. The reconstructed sign must be temporarily placed at the corner of N. MacArthur Drive and 11th Street to direct the oncoming traffic to the alternate driveway, as directed by the Engineer. You are responsible for the temporary support of the sign, and maintenance of the sign. After the Heinz driveway is re-opened, you must reconstruct the signs on the Eastern and Western bridge railings with 2 - 4x 4 timber treated posts at a permanent location near the Heinz driveway, as directed by the Engineer.

Replace "Reserved" in section 15-2.04F with:

15-2.04F Reconstruct Railing, Metal Tubular

Section 15-2.04F includes sawcutting the existing Asphalt Concrete to allow removal of the concrete channel lining, reconstructing the railing in the same location and resetting the electrical conduit currently attached to the railing. Damaged or missing portions of the railings and electrical conduits must be replaced with similar materials acceptable to the Engineer or must comply with Section 83.

Notify the Engineer 5 days in advance to beginning the work to coordinate moving the parked cars from the parking spaces directly adjacent to the canal.

Service to the parking lot lights must be maintained from 7 PM to 6 AM.

Replace section 15-2.05C with:

15-2.05C Abandon Culverts and Pipelines

15-2.05C(1) General

Abandon culverts or pipelines by removing portions of the culverts or pipelines, filling the inside, and backfilling the depressions and trenches to grade. As an alternative to abandoning a culvert or pipeline, you may remove the culvert or pipeline, dispose of it, and backfill.
Notify the Engineer before abandoning a culvert or pipeline.

15-2.05C(2) Materials

Openings into existing structures that are to remain in place must be plugged with minor concrete under section 90.

15-2.05C(3) Construction

Wherever culverts or pipelines intersect side slopes, remove them to a depth of at least 3 feet. Measure the depth normal to the plane of the finished side slope. Abandon the remaining portion of the culvert or pipeline.

Culverts or pipelines that are 12 inches or more in diameter must be completely filled by authorized methods. Backfill with sand that is clean, free draining, and free from roots and other deleterious substances. As an alternative to sand, you may backfill with one of the following:

1. Controlled low-strength material under section 19-3.02F
2. Slurry cement backfill under section 19-3.02D

Ends of culverts and pipelines must be securely closed by a 6-inch-thick, tight-fitting plug or wall of commercial-quality concrete.

15-2.05C(4) Payment

If backfilling inside the culvert or pipeline is required, payment for backfilling inside the culvert or pipeline is paid for as sand backfill. Payment for backfilling outside the culvert or pipeline is included in the payment for abandon culvert or abandon pipeline.

Replace section 15-2.05D with:

15-2.05D Abandon Inlets

Abandon pipe inlets and concrete drainage inlets as shown.

The top portion of the inlets must be removed to a depth of 2 feet below finished grade.

Delete the 4th paragraph of section 15-3.01 in the RSS for section 15-3.01.

Add to section 15-4.01A(2):

The Department's review time for work plans for removing specific structures or portions of structures is shown in the following table:

Structure or portion of structure	Review time
11TH Street East Tracy OH	40 days

Add to section 15-4.01C(1):

Remove the following bridges or portions of bridges:

Bridge no.	Description of work
Timber bridge over West Side Irrigation Canal	Remove timber bridge in its entirety that crosses over the West Side Irrigation Canal
Heinz Driveway Concrete over West Side Irrigation Canal	Remove concrete bridge and steel girders in its entirety that crosses over the West Side Irrigation Canal.

Add to section 15-4.01C(3)(a):

You can close the Heinz driveway to traffic and pedestrians for a period of no more than 2 weeks to remove the bridge and construct the reinforced concrete pipe. The bridge must be removed, the reinforced concrete pipe placed and backfilled, and the driveway paved within 2 weeks for the public to use the driveway.

Notify the Engineer 3 weeks before closing the Heinz driveway so that the engineer can schedule the closure with the businesses.

Add to section 15-4.02D:

Payment for the timber bridge removal over West Side Irrigation Canal includes excavation, backfill excavation and backfill for foundation removal, and all removal of the existing bridges including any existing bent and abutment footings, portion of existing timber and steel piles in conflict with drainage systems, and disposal of all items. Payment includes repairing any damage to the existing concrete lined channel.

Payment for the concrete bridge removal Heinz Driveway includes excavation and backfill for foundation removal, and all removal of the existing bridges including steel girders/superstructure and any existing

bent and abutment footings, portion of existing timber and steel piles in conflict with drainage systems, and disposal of all items. Payment for excavation and backfill other than for bridge foundations is included in Payment for 48” Reinforced Concrete Pipe.

^^^

Trim trees, where necessary, to maintain a vertical clearance of 18 feet for truck and RV traffic. Trimming must be balanced for stability and aesthetics.

Cuts or damage area of tree bark caused by the Contractor equipment and operations must be treated with a sealer such “Tre-hold” or equivalent as approved by the Engineer. Application of the tree sealer must be per the manufacturer’s recommendations.

All trimmings and debris generated from the trimming operations must be removed completely from the project site and adjoining sites.

^^

19 EARTHWORK

Add to section 19-1.03b:

Roadway Excavation, Remove Silt (Unsuitable Material) is shown and pertains to removing the silt currently in the Westside Irrigation Canals.

Roadway Excavation, Remove Dredged Material (Unsuitable Material) is shown and pertains to removing the dredged material stored on the banks of the Westside Irrigation Canals.

Add to section 19-2.03G:

Roughen excavation slopes and flat surfaces to receive erosion control materials by scarifying to a depth of 4 inches.

Add to section 19-2.04:

Existing pavement removed between the sawcut and existing gutter/edge of pavement is included in payment for roadway excavation.

Add to section 19-3.01A(1):

Structure backfill includes constructing the geocomposite drain. Geocomposite drain must comply with section 68-7.

Replace "Reserved" in section 19-3.03A with:

Where shown, remove material below the bottom of retaining walls. Replace with Lean Concrete and place and compact as specified for structure backfill in section 19-3.02H.

Add to section 19-3.04:

Pervious backfill material placed within the limits of payment for bridges is paid for as structure backfill (bridge). Pervious backfill material placed within the limits of payment for retaining walls is paid for as structure backfill (retaining wall).

Add to section 19-6.03D:

Settlement periods and surcharges are required for bridge approach embankments as shown in the following table:

Bridge name or number	Abutment number	Location	Wall/ Embankment Height	Surcharge height (feet)	Settlement period without wick drain installation (days)	Settlement period with wick drain installation (days)	Wick Drain Spacing (triangular pattern)	Wick Drain Tip Elev
29C-0465 (New br. no.)	1	< 150' from Abut (Area 2 on Plan Sheet CD-11)	Up to 42 ft	0.0	150	30	4-foot	10
29C-0465 (New br. no.)	1	> 150' from Abut (Area 1 on Plan Sheet CD-11)	≥ 25 ft	0.0	150	90	8-foot	20
29C-0465 (New br. no.)	1	> 150' from Abutment	< 25 ft	0.0	90	90	No Wick Drains Required	
29C-0465 (New br. no.)	2	< 150' from Abut (Area 3 on Plan Sheet CD-11)	Up to 42 ft	0.0	150	30	4-foot	10
29C-0465 (New br. no.)	2	> 150' from Abut (Area 4 on Plan Sheet CD-11)	≥ 25 ft	0.0	150	90	8-foot	20
29C-0465 (New br. no.)	2	> 150' from Abutment	< 25 ft	0.0	90	90	No Wick Drains Required	
Temporary Bridge	1	Area 5 on Plan Sheet CD-12	≥ 25 ft	0.0	90	30	6-foot	20
Temporary Bridge	1	Rest of Detour Approach	< 25 ft	0.0	30	30	No Wick Drains Required	
Temporary Bridge	2	Area 6 on Plan Sheet CD-12	≥ 25 ft	0.0	90	30	6-foot	20
Temporary Bridge	2	Rest of Detour Approach	< 25 ft	0.0	30	30	No Wick Drains Required	

The contractor must install the wick drains unless otherwise authorized by the Engineer.

Add to section 19-7.02A:

Import Borrow must not contain expansive soils.

Add to section 19-7.02C:

The portion of imported borrow placed within 4 feet of the finished grade must have a resistance (R-Value) of at least 15.

^^^

All drop slips for landscape materials (including plants, fertilizers, pesticides, seed mixes) must be given to the Engineer. Landscape Contractor must provide at least one English speaking person at all times who must be familiar with and direct the work.

Environmental Requirements

Do not install landscape materials when ambient temperatures may drop below 45 degrees F (12 degrees C) or rise above 95 degrees F (39 degrees C) or when wind velocity exceeds 30 mph (48 k/hr).
Delivery, Storage and Handling

Deliver all items to the site in their original containers with all labels intact and legible. Protect plants at all times from sun or drying winds as necessary or until planted. Do not handle plants by stems, trunks, or tops, but only by container.

References

ANSI Z60.1 - Nursery Stock.

California State Department of Agriculture - Regulations for nursery inspections, rules, and grading.

Import Topsoil

Existing topsoil which is not considered hazardous will be used for planting areas. Where additional soil is required, provide samples with spec sheet prior to ordering material. Topsoil in planting areas must be Class "A" (imported) Topsoil must be transported from the source to its final position unless stockpiling is specified.

Class "A" topsoil must be from a source outside the limits of the project selected by the Contractor and in compliance with the requirements specified herein. The Engineer may make such inspections and require the Contractor to perform such tests as deemed necessary to determine that the material meets the requirements.

At least thirty-(30) calendar days before scheduled use, the proposed source of topsoil must be submitted to the Engineer for approval so that it may be tested. The Contractor must submit a written request for acceptance that must be accompanied by a written soils test report that states that the proposed source complies with these specifications.

Class "A" topsoil must have the same relative composition and structure, a friable sandy loam character, and be free of roots, clods, and stones larger than one inch (1") in greatest dimension, pockets of coarse sand, noxious weeds, sticks, brush, and other litter. It must not be infested with nematodes or other undesirable insects and plant disease organisms.

All Class "A" topsoil must meet the following additional requirements:

Gradation Limits: Sand, 50-80 percent, clay 20 percent maximum, and silt, 30 percent maximum.

The sand, clay, and silt gradation limits must be as defined in ASTM D422.
Permeability Rate: Not less than 0.5 inches per hour nor more than 2 inches per hour when tested in accordance with ASTM D 2434, California Test 220, or other approved methods.

Agricultural Suitability: The topsoil must be suitable to sustain the growth of the plants specified.

In no case shall there be more than five percent (5%) by volume of stones smaller than one inch (1"), coarse sand and small clay lumps.

Topsoil is not permitted as fill or backfill material within structure limits or under paved areas.

Plant Material

Trees, shrubs, and ground cover must be grown by an established nursery having been in the business of growing trees, shrubs, ground cover a minimum of five (5) years. At the option of the Engineer, plants must be inspected and tagged at the nursery prior to shipment to planting site.

Trees: All trees must be of the specified container size and of the species specified.

Shrubs: Shrubs must be of the specified type and size, selected from high quality, well-shaped nursery stock.

Source Quality Control: Quality and size must conform to current edition of "USA Standard for Nursery Stock" for number one grade nursery stock as adopted by American Associations of Nurserymen. In all cases, botanical names must take precedence over common names.
Plant names indicated or listed in the "Plant Legend" on the Contract documents, conform to the approved names given in "An Annotated Checklist of Woody Ornamental Plants in California, Oregon, and Washington, Manual 4091", published by the University of California (1979). Except for names not covered therein, the established custom of the nursery is followed.

Condition of plants must be in accordance with the California State Department of Agriculture's regulations for nursery inspections, rules, and grading and must be symmetrical, typical for variety and species, sound, healthy, vigorous, free from plant disease, insect pests, or their eggs, and must have healthy normal root systems, well filling their containers, but not to the point of being root bound.

Plants must not be pruned prior to delivery, except as authorized by the Engineer. In no case shall trees be topped before delivery.

The size of the plants must correspond with that normally expected for species and variety of commercially available nursery stock, or as specified on the Contract documents. The minimum acceptable size of all plants, measured before pruning with the branches in normal position, must conform to the measurements, if any, specified on the Contract documents. Plants larger in size than specified may be used with the acceptance of the Engineer, but the use of larger plants will make no change in contract price.

All plant material must be subject to the inspection and acceptance of the Engineer before planting. A representative number of plants as determined by the Engineer may be inspected for size and condition of root growth, insects, injuries and defects. Plants not accepted are to be removed from the site immediately and replaced with suitable plants. The Engineer reserves the right to reject entire lots of plants represented by defective samples.

Plant material quantities indicated on the Contract documents are for estimating purposes only. Furnish and install all plant materials as indicated - drawn quantities supersede numerical quantities.

Fertilizers, Soil Amendments and Water

Fertilizing and soil conditioning materials must comply with the applicable requirements of the State Food and Agricultural Code. All materials must be packaged first grade, commercial quality products identified as to source, type of material, weight, and manufacturer's guaranteed analysis. Fertilizing and soil conditioning material must not contain toxic ingredients or fillers in quantities harmful to human life, animals, or plants.

Contractor must furnish a Certificate of Compliance stating that the material substantially meets contract documents.

Exact fertilizing and conditioning materials and the required composition and quantities must be determined by agronomic soils test.

Commercial Fertilizer: A complete fertilizer in pellet or granular form having a chemical analysis as specified on the Contract documents or City Standard Specifications. Deliver in unopened original containers with brand name marked thereon. Material that becomes caked or otherwise damaged must not be used. Fertilizer composition to be 16-20-0. Exact composition and type to be determined by the agronomic soils test and will be supplied by the Contractor at no additional cost.

Nitrogen Stabilized Organic Soil Amendment: Organic soil amendment must be redwood sawdust free of shavings or particles of other woods such as fir or pine, supplied in bulk and .5% nitrogen stabilized by standard techniques. An acceptable substitute would be nitrogen stabilized fir or cedar sawdust ground to 0-1/4" particle size and 1.0% nitrogen stabilized.

Plant Tablets: Best-Paks 20-10-5 planter paks. Place Best-Paks in backfill, 6"-8" under soil surface & 1" from rootball at all plants when planted. Apply paks at the following rate: one gallon - 1 Pak; 5 gallon - 3 Paks; 15 gallon - 8 Paks; boxed trees - 12 Paks.

Soil Sulfur: Agricultural grade Sulfur containing minimum of 99% Sulfur (expressed as elemental).

Gro-Power Plus commercial fertilizer.

Gro-Power Controlled Release Nitrogen.

Contractor must deliver Sixty five 50 pound bags of Gypsum Soil Amendment to 8188 West 11th Street, Tracy, CA. Contact Jack Alvarez at (209) 830-7004 to make arrangements for delivery.

Water: Water must be clean, fresh and free of substances or matter that could inhibit vigorous growth of plants. Water must be supplied at Contractor's expense at no additional cost through the end of the maintenance period.

Supplies

Mulch: "Double Ground Bark Mulch, dark brown", 3" depth, no sapwood, supplied in bulk form. Submit quart-sized sample for approval. Engineer has the right to reject all samples and request additional samples until a suitable mulch material is approved. Available from: Grover Environmental Services (209) 545-4401, or Gro-Well Brands, Stockton, CA, (209) 982-4936.
Tree Stakes: Use Lodgepole Stakes as per City of Tracy Landscape Standard Detail D7.4.1.
Filter Fabric: Non-woven continuous filament polyester fabric. Weight 4.0 oz. per square yard, minimum. Grab strength 100 lb. Water flow rate 105 gpm/sq. ft. Delivered in 15' wide roles minimum. Geolon N40 as manufactured by Nicolon Corp, Valparisos, FL, or approved equal.
Drain Rock: "¾" Crushed Rock" in accordance with City of Tracy Standard Specifications Section 200 – Rock Materials.
Non-selective herbicide for weed abatement must be Round-Up or approved equal.
Pre-emergent herbicide must provide six (6) month control. In areas of woody ornamental plants, use Ronstar, or approved equivalent.

EXECUTION

General

Earthwork and topsoil placement must include the preparation for and the spreading, densification, cultivation, and raking of topsoil, including fertilization and conditioning.

Unless otherwise provided, curbs, cobble paving, colored concrete, irrigation systems, and similar improvements required by the Contract documents must be constructed following rough grading and before landscaping.

Planting holes and backfill must be as herein specified.

Preliminary rough grading and related earthwork to prepare areas for landscaping work to within one-tenth foot (0.1') of finish grade, or to sub-grade for Class "A" topsoil, must be completed in accordance with the Site Preparation, Earthwork and Site Grading section of contract documents.

Soil Preparation

General:

Soil must not be worked when it is so wet or so dry as to cause excessive compaction or the forming of hard clods or dust.

Debris Removal: Remove all construction debris, decomposed granite, base rock, refuse and paving material to ensure sufficient soil quantity to accommodate required topsoil.

Planting areas must be free of weeds and other extraneous materials. Topsoil must be on-site surface soil, unless otherwise noted. Where import soil is required to bring to correct grade, the type and

thickness of topsoil must be Class “A”, six inches (6”) thick. Fills in landscape areas may be placed in 2” layers and compacted to 85 percent of maximum dry density.

The existing soil below sub-grade for Class “A” topsoil must be ripped in two directions full depth to twelve inches (12”) prior to spreading topsoil. All compacted areas must be loosened.

Fertilizing and Conditioning Procedures:

The planting area must be brought to finish grade before spreading the fertilizers or conditioning materials specified.

The Contractor, at no additional cost, must make one (1) additional soils test per acre of all planting areas before and upon completion of excavation, topsoil backfilling, and grading to determine compliance with fertilizing and conditioning. The Contractor must coordinate soil testing with the Engineer. Apply fertilizers and soil conditioners at the rates designated by the soils report.

Fertilizing and conditioning materials must be mechanically spread at a uniform rate. The quantities of materials necessary for the planting area must be at the site and must be verified by delivery tickets furnished to the Engineer before spreading.

After spreading, the fertilizing and conditioning materials must be uniformly cultivated into the upper six inches to eight (6”-8”) of soil by suitable equipment, rototiller or equal, operated in at least two directions approximately at right angles. The resulting soil must be a friable condition.

The following fertilizer and soil amendment guidelines must be used for bidding purposes for planting areas, however, the Contractor must amend it as necessary per the soils test report at no additional cost.

Item	Rate per 1,000 Square Feet
16-20-0 Ammonium Phosphate	15 pounds
Nitrogen Stabilized Organic Amendment	4 cubic yards
Soil Sulfur	15 pounds

Finish Grading:

After fertilizing and conditioning, the soil must be watered and allowed to settle to provide a stable surface, not overly densified to the extent that it will prevent aeration and water infiltration. After the soil has dried out to a workable condition, the planting areas must be re-graded, raked, and smoothed to the required grades and contours. Finish surfaces must be clean and suitable for planting.

The finish grade must be smooth, uniform, and free of abrupt grade changes and depressions to ensure surface drainage. All planting areas must be loose and friable prior to planting. Grade surfaces to assure areas do not pond or create pockets adjacent hardscape surfaces. Provide subgrade surfaces free from irregular surface changes.

PLANTING

General

All sprinkler/irrigation work shall be inspected and accepted by the Engineer, prior to start of any work of this subsection.

Location of utility structures and lines:

Prior to excavation for planting or placing of stakes, locate all utilities, electric cables, conduits, irrigation lines, heads, valves and valve control wires, and all utility lines so that proper precautions may be taken not to damage such improvements.

In the event of a conflict between utilities and plant locations, promptly notify the Engineer, which shall arrange for one or the other to be relocated. Failure to follow this procedure shall place upon the Contractor the responsibility to make, at his own expense, any and all repairs for damages resulting from work.

All plants will be inspected by the Engineer prior to planting, including plants previously approved at the nursery. The Contractor is responsible for the condition of all plants, planted or otherwise, until acceptance.

Quantities:

Plant materials must be furnished in the quantities and/or spacing as shown or noted for each location, and must be of the species, kinds, sizes, etc., as symbolized, and/or described in the Plant Legend, as indicated on the Contract documents.

The Contractor is to verify all sizes and quantities on the Contract documents. Promptly report any discrepancy to the Engineer.

Substitution:

Any plant material or any development materials specified by trade name or equal, must be according to these Contract documents and Specifications.

Installation and use of substitute items must not be made until the Contractor is in receipt of written acceptance from the Engineer. Substitution proposals for plant material must be accompanied by written proof of non-availability within a five hundred mile radius of the project site for material originally specified and proof that material was ordered in a timely matter upon award of contract.

Protection and Storage:

The Contractor must regularly water all nursery stock in containers and place them in a cool area protected from sun and drying winds.

The Contractor must not allow plants to dry out before or while being planted. Keep exposed roots moist by means of wet sawdust, peat moss or burlap at all times during planting operations. Do not expose roots to the air except while being placed in the ground. Wilted or diseased plants, whether in place or not, will not be accepted and must be replaced at the Contractor's expense.

The Contractor must moisten prepared surface immediately prior to installing plant material.

The Contractor must install plant material within 48 hours of delivery to site.

The Contractor must water landscaped areas immediately after installation.

Layout and Plant Location:

Planting areas, borders and boundaries, will be surveyed and staked by the Contractor and approved by the Engineer.

Detailed layout within the planting areas must be performed by the Contractor and approved by the Engineer prior to planting.

The Contractor must locate first row of plants in areas designated for center to center spacing of plants must be located at one and one-half (1-1/2) of designated spacing from the edge of the area. See City of Tracy Landscape Standard Detail D7.9.

Tree and Shrub Planting

Planting Holes:

Mark tree and shrub locations on site using stakes, gypsum or similar methods, and obtain acceptance by the Engineer prior to digging holes. Adjust location as necessary prior to planting. Test drainage of plant beds and pits by filling with water (minimum 6"). The retention of water in planting beds and plant pits for more than eight hours must be brought to the attention of the Engineer.

Planting holes must be approximately square and must be twice the width of the plant container unless otherwise shown on the Contract documents. The holes must be one-and-one half times the depth of the root ball, or as shown on the Contract documents. The hole must be larger, if necessary, to permit handling and planting without injury or breakage of the root ball or root system. Any plant having a broken or cracked root ball before or during planting must not be planted. Sides of the planting pit and the root

ball must be scarified. A mound of firm native soil must be place at bottom of planting holes. Provide drain sump for all trees per landscape details.

Underground Obstructions:

In the event that underground construction work or obstructions are encountered in the planting operation, alternate locations for plant material will be selected by the Engineer. Operation will be done at no extra cost.

Planting Procedures:

Planting Backfill Mix: Mix planting soil prior to backfilling and stockpile at the site. No mixing for individual planting holes will be permitted. Iron sulfate must not contact cement surfaces because severe staining can occur; repair and or replacement of stained cement must be the Contractor's responsibility. The actual material and amounts, as determined by the agronomic soils test, must be supplied by the Contractor at no additional. The following material must be thoroughly blended and used as a backfill mix.

1. Trees and Shrubs, 0-12" depth:
   6 parts by volume on-site soil
   4 parts by volume Nitrogen Stabilized Organic Amendment
   1 lbs. 16-20-0 per cubic yard of mix
   2 lbs. Iron Sulfate per cubic yard of mix
2. Trees and Shrubs, below 12" depth: Incorporate 1 lb. 16-20-0 and 2 lbs. Iron Sulfate per cubic yard of mix.

Remove all plants from their containers and set so that, when settled, they are one inch (1") higher than the required grade as they bore to the natural grade before being transplanted. Plant each plant in the center of the pit and backfill with prepared soil. Compact the backfill mix around the ball or roots. Do not use soil in muddy condition for backfilling. Do not fill around trunks or stems. Cut off all broken or frayed roots.

Thoroughly water each plant when the hole is one-half filled.

After watering, backfill the remainder of the hole and tamp the soil in place until the surface of the backfill is level with the surrounding area and the crown of the plant is at the finished grade of the surrounding area.

After backfilling, a basin must be constructed around each plant. Each basin around shrubs and trees must be of a depth sufficient to hold at least six inches (6") of water. Basins must be the same size as the container size of each individual plant. The basins must be constructed of amended backfill material.

Set the fertilizer packets to be used with each plant on the top of the root ball so the required number of packets to be used in each hole can be easily verified. Bury packets upon approval by the Engineer.

Immediately after planting, apply water to each tree and shrub by means of a hose. Apply water in a moderate stream in the planting hole until the material about the roots is completely saturated from the bottom of the hole to the top of the ground.

Apply water in sufficient quantities and as often as seasonal conditions require to keep the planted areas moist at all times, well below the root system of plants.

Basins around shrubs and trees in slopes must be permanently maintained.

Pruning:

Pruning must be limited to the minimum necessary to remove injured twigs and branches. Upon approval of the Engineer, pruning may be done before delivery of plants, but not before plants have been inspected and approved.

All trees must be staked using 10' Lodge Pole Pine stakes 2 per tree, per the planting details on the Contract documents. Staking must be done immediately after planting. Stakes must not be driven into the rootball of the tree.

Ground Cover Planting:

Soil preparation and fine grading must be completed prior to ground cover planting. Ground cover must be planted in moist soil and spaced as indicated on the Contract documents.

Plant in neat, straight, parallel and staggered rows as indicated on plan.

Each plant must be planted with its proportionate amount of flat soil to minimize root disturbance. Soil moisture must be such that the soil does not crumble when removing plants.

Following planting, ground cover areas must be re-graded to restore smooth finish grade and to ensure proper surface drainage. Mulch must be spread over the planted areas. Watering must begin immediately following mulching.

Mow Less Sod Installation

Turf (sod) must be placed on the areas shown on the plans as "Mow Less Sod." Sod must be a mixture of 40% Molate red fescue, 30% Idaho fescue, and 30% Western Mokelumne festuca varieties from Delta Blue Grass Sod (209-469-7979) and must be healthy field grown sod containing not more than ½ inch thick thatch. The age of the sod must be not less than 8 months or more than 16 months.

Sod must be grown in conformance with California agricultural codes. The sod must be free from disease, weeds, insects, and nondesirable types of grasses and clovers. Soil upon which the sod has grown must contain less than 50% silt clay.

Sod must be machine cut at a uniform soil thickness of 5/8" +/- ¼", not including top growth and thatch.

Sod must be protected with tarps or other protective covers during delivery and must not be allowed to dry out during delivery or prior to placement.

Areas to be planted to sod must be cultivated in conformance with the provisions in these technical documents.

Weeds and debris must be removed before cultivation and must be disposed of offsite.

Soil amendment and commercial fertilizer must be applied at the rates shown on the plans and in conformance with the provisions incorporated into the soil by mechanical means.

After cultivation, installation of irrigation systems and excavation and backfilling of plant holes are completed, areas to be planted to sod must be fine graded and rolled. Areas to be planted to sod must be graded to drain and must be smooth and uniform prior to placing sod. Areas to be planted to sod adjacent to sidewalks, concrete headers, header boards, and other paved borders and surfaced areas must be 1-1/2" +/- ¼" below the top grade of the facilities, after find grading, rolling and settlement of the soil.

Sod must be placed so that the ends of adjacent strips of sod are staggered a minimum of 2' (feet.) Edges and ends of sod must be placed firmly against adjacent sod and against sidewalks, concrete headers, header boards, and other paved borders and surfaced areas. Sod on slopes must be staked into place with wood or biodegradable stakes if it will not stay in place.

After placement of the sod, the entire sodded area must be lightly rolled to eliminate air pockets and to ensure close contact with the soil. After rolling, the sodded areas must be watered so that the soil is moistened to a depth of 4". Sod must be allowed to dry out.

If irregular or uneven areas appear before or during the plant establishment period, these areas must be restored to a smooth and even appearance.

DO NOT MOW SOD as it is to develop into a mow less condition.

Pick up and remove all excess scraps of material and dispose of offsite.

Mulching:

Mulch trees, shrubs and ground cover areas after planting with three inches (3") of mulch.

Maintenance and Plant Establishment:

Maintenance period will be a minimum of ninety (90) days after "Date of Acceptance of Installation" of all planting areas and after all punch list items have been completed. The last 30 days of maintenance must include readjustments of the controller to harden off plant material and taper watering schedules to meet city's standards. All watering during this last 30-day maintenance period must be completed within the hours of 10 pm and 7 am, on a five-(5) day-per-week schedule. The Contractor must request in writing from the Engineer notification of the date of the start of the maintenance period. At the acceptance of all planting areas, the Contractor must request in writing from the Engineer notification of the date of the completion of the maintenance period. The maintenance period must not officially begin or end without written notification from the Engineer.

The Contractor must maintain all planted areas on a continuous basis as they are completed during the progress of the work and during the establishment and maintenance period, and must continue to maintain them until final acceptance in accordance with the following.

Water, weed, fertilize, prune, spray and apply top dressing as necessary to promote a healthy growing condition. All planted areas must be kept free of debris and must be weeded and cultivated at intervals not to exceed ten (10) days. Keep project neat and attractive throughout the maintenance period.

Apply herbicides for weed control, and at the end of the maintenance period, in accordance with manufacturer's instructions and applicable laws and regulations. Pre-emergent herbicide must be required in all planter, shrub and ground cover areas. Remedy damage resulting from the use of herbicides.

Exterminate rodents and insects as required and in accordance with applicable laws and regulations. Remedy damage from use of rodenticides and insecticides.

Adjust the irrigation system to sufficiently saturate root zone without rotting trees, shrubs, and ground cover.

Repair or replace any damaged item caused by vehicles, vandals, bicycles, or foot traffic during the maintenance period.

Fertilize with "Gro-Power Plus" at 30 lbs. /1,000 s.f. every thirty (30) calendar days (twice during the maintenance period) and at the end of the ninety (90) day maintenance period, or as indicated by the agronomic soils test.

The Contractor must adhere to fertilization requirements of the soils tests at no additional cost.

Maintenance period must be extended if plant material is not in a healthy growing condition. When all maintenance work has been completed to the satisfaction of Engineer, the Engineer will issue the Contractor a written notice of completion of maintenance.

Inspections:

All inspections herein specified must be made by the Engineer. The Contractor must request inspection at least forty-eight (48) hours in advance of the time the inspection is required. Requested inspections, subsequently canceled without twenty-four (24) hours' notice, will be billed to the Contractor.

Inspection will be required for, and not necessarily limited to, the following parts of the work:

- At completion of the incorporation of soil amendments and fine grading.
- Prior to digging plant pits for trees and shrubs.
- During backfilling of plant pits with amended backfill.
- A formal inspection to start the ninety (90) day maintenance period.
- Final inspection at the end of the maintenance period.

MEASUREMENT AND PAYMENT

Landscape Planting is paid for on a lump sum basis. Measurement will be based on the percentage of work completed as determined by the Engineer. Landscape Planting must include, but is not limited to, soil preparation, fertilizers and amendments, gypsum soil amendment, delivery of gypsum soil amendment, grading, import soil, planting and installation, plants, shrubs, trees, and 90-Day Maintenance Period. The contract lump sum price must include full compensation for furnishing all labor, materials, tools, equipment, delivering gypsum soil amendment, and incidentals and for doing all work involved, complete and in place, all as indicated on the contract documents, and as authorized by the Engineer, and no additional compensation will be allowed.

COBBLE PAVING

This work must consist of constructing cobble pavement as shown on the Plans. Cobble paving must comply with City Of Tracy Parks and Streetscape Standard Plan D 1.9, these specifications, and City of Tracy Standard Specifications. Cobble sample must be submitted to the Engineer prior to ordering.

Cobble to be 4''-7" size river washed cobble, Noiyo or approved equal with no chips or broken edges allowed. Cobble must be washed prior to setting and installed flat side down.

The Contractor is responsible for protecting the adjacent concrete and asphalt from damage caused by his operations.

The subgrade must be watered and thoroughly compacted. Unsuitable material must be removed and replaced with new material compacted at its optimum moisture content.

The Contractor must clean, at his expense, all cement, mortar or stains from cobble paving not more than 4 days after installation. Use clean water and stiff brushes to clean off residue. Do not use wire brushes or acid type cleaning agents.

Replace or repair defective or damaged cobbles. Unfilled or defective joints must be repaired. The contractor must repair and replace any existing cobble damaged during construction and the new cobble must match the existing for the MacArthur Drive median.

MEASUREMENT AND PAYMENT

Cobble Paving shall be bid as a separate item by the square foot. Measurement will be based on the percentage of work completed as determined by the Engineer. Cobble Paving must include full compensation for furnishing all the labor, materials, reinforcement, tools, equipment, saw cut, incidentals, and for doing all the work involved, complete and in place, all as specified in the Plans, City of Tracy Parks and Streetscape Standard Plan D 1.9, these special provisions, City of Tracy Standard Specifications, and as authorized by the Engineer, and no additional compensation will be allowed.

TAN DECOMPOSED GRANITE

This work must consist of installing Tan Decomposed Granite in the landscape planter areas as shown on the Plans. The installation must be in accordance with City Of Tracy Parks and Streetscape Standard Plan D 1.10, these Plans and Specifications, the City of Tracy Standard Specifications, and/or as directed by the Engineer. A sample of Tan Decomposed Granite must be submitted to the Engineer for inspection and approval, prior to ordering.

The Contractor is responsible for protecting the adjacent landscape plantings, landscape irrigation systems, concrete and asphalt from damage caused by his installation operations.

MEASUREMENT AND PAYMENT

Tan Decomposed Granite shall be bid as a separate item by the square foot. Measurement will be based on the percentage of work completed as determined by the Engineer. Installation of Tan Decomposed Granite must include full compensation for furnishing all the labor, all materials, tools, equipment, incidentals, and for doing all the work involved, complete and in place, all as specified in the Plans, City of Tracy Parks and Streetscape Standard Plan D 1.10, these special provisions, City of Tracy Standard Specifications, and as authorized by the Engineer.

BOULDERS

This work consists of installing granite boulders as specified on the plans. Boulders shall be furnished by Deco Rocks Inc. Contact is Shane Fernandes (209-614-5450). Install boulders as detailed. Contact city at time of placement for any adjustments to placement as the city deems necessary.

MEASUREMENT AND PAYMENT

Boulders shall be bid as a separate item on a lump sum basis. Measurement will be based on the percentage of work completed by the Engineer. Installation of Boulders must include full compensation for furnishing all the labor, all materials, tools, equipment, incidentals, and for doing all the work involved, complete and in place, all as specified in the plans.

MOW STRIPS

This work consists of installing mow strips where shown on plans. Install as per city details. Flag mow strip locations for city approval prior to installation.

MEASUREMENT AND PAYMENT

Mow Strips shall be bid as a separate item on a lineal foot basis. Measurement will be based on the percentage of work completed by the Engineer. Installation of Mow Strips must include full compensation for furnishing all the labor, all materials, tools, equipment, incidentals, and for doing all the work involved, complete and in place, all as specified in the plans.

Progress payments will be based on the percentage of work completed as reviewed and approved by the Engineer at the jobsite.

IRRIGATION SYSTEM

The work must include all materials, labor, services, transportation, and equipment necessary to perform the work as indicated on the contract documents, complete and operational.

Irrigation installation and materials must conform to City of Tracy Parks and Streetscape Standard Contract documents, latest edition, except for the modifications as shown/noted on the project Landscape/Irrigation Improvement Plan Detail Sheets.

Contract Construction Documents

Due to the scale of the contract documents, it is not possible to indicate all offsets, fittings, sleeves, etc. which may be required. The Contractor must carefully investigate the structural and finished conditions affecting all of his work and plan his work accordingly, furnishing such fittings, etc. as may be required to meet such conditions. Contract documents are generally diagrammatic and indicative of the work to be installed. The work must be installed in such a manner as to avoid conflicts between irrigation systems, planting, and architectural features.

All work called for on the contract documents by notes or details must be furnished and installed whether or not specifically mentioned on the drawings. When an item is shown on the contract documents but not shown on plans or vice versa, it must be deemed to be as shown on both. The Engineer must have final authority for clarification.

The Contractor must not willfully install the irrigation system as shown on the contract documents when it is obvious in the field that obstructions, grade differences or discrepancies in area dimensions exist that might not have been considered in the Engineering. Such obstructions or differences should be brought to the attention of the Engineer as soon as detected. In the event this notification is not performed, the Irrigation Contractor must assume full responsibility for any revision necessary.

Manufacturer's directions and detailed contract documents must be followed in all cases where the manufacturer of articles used in this contract furnishes directions covering points not shown in the contract documents and specifications.

All materials supplied for this project must be new and free from any defects. All defective materials must be replaced immediately at no additional cost to Owner.

The Contractor must secure the required licenses and permits including payments of charges and fees, give required notices to public authorities, verify permits secured or arrangements made by others affecting the work of this section. (No fee for City of Tracy permits.)

Existing Conditions

Contractor must verify and be familiar with the locations, size and detail of points of connection provided as the source of water and electrical supply, connection to the irrigation system.

Irrigation design is based on the available static water pressure shown on the contract documents. Contractor must verify static water pressure on the project prior to the start of construction. Should a discrepancy exist, notify the Engineer prior to beginning construction.

Contractor must locate and flag all existing irrigation components designated to remain prior to any demolition.

Prior to cutting into the soil, the Contractor must locate all cables, conduits, and other utilities as are commonly encountered underground and he must take proper precautions not to damage or disturb such improvements. If a conflict exists between such obstacles and the proposed work, the Contractor must promptly notify the Engineer who will arrange for relocations. The Contractor will proceed in the same manner if a rock layer or any other such conditions are encountered.

The Contractor must protect all existing utilities and features to remain on and adjacent to the project site during construction. Contractor must repair, at his own cost, all damage resulting from his operations or negligence.

The Irrigation Contractor must coordinate with the General Contractor for installation of required sleeving as shown on the contract documents.

Inspections

Lines must not be covered over until accepted by the Engineer. The Contractor is solely responsible for notifying the Engineer, a minimum of 48 hours in advance, where and when the work is ready for testing. Should any work be covered without testing or acceptance, it must be, if so ordered, uncovered at the Contractor's expense.

Inspections will be required for the following at a minimum:

- System layout
- Pressure test irrigation main line (2 ½ hours at 125 PSI).
- Coverage test of irrigation system
- Final inspection prior to start of maintenance period
- Final acceptance

Site observations and testing will not commence without the record contract documents as prepared by the Irrigation Contractor. Record contract documents must be complete and up to date for each site visit.

Work that fails testing and is not accepted will be re-tested. Hourly rates and expenses of the Engineer for re-inspection or re-testing will be paid by the Irrigation Contractor at no additional expense to City.

Submittals

After award of contract and before any irrigation system materials are delivered to the job site, submit to the Engineer a complete list of all irrigation systems, materials, or processes proposed to be furnished and installed as part of this contract.

Show manufacturer's name and catalog number for each item, furnish six sets of complete catalog cuts and technical data, furnish the manufacturers recommendations as to the method of installation.

No substitutions will be allowed without prior written acceptance by the Engineer. Any requests for substitutions must be made within 30 days after award of contract.

Manufacturer's warranties must not relieve the Contractor of his liability under the guarantee. Such warranties must only supplement the guarantee.

Substitutions

If the irrigation contractor wishes to substitute any equipment or materials for equipment or materials listed on the irrigation contract documents he may do so by providing the following information to the Engineer for approval.

Provide a written statement indicating the reason for making the substitution.

Provide catalog cut sheets technical data and performance information for each substitute item.

Provide in writing the difference in installed price if the item is accepted.

Storage and Handling

Use all means necessary to protect irrigation system materials before, during, and after installation and to protect the installation work and materials of all other trades. In the event of damage, immediately make all repairs and replacements necessary to the acceptance of the Engineer and at no additional cost to the City.

Exercise care in handling, loading, unloading, and storing plastic pipe and fittings under cover until ready to install. Transport plastic pipe only on a vehicle with a bed long enough to allow the pipe to lay flat to avoid undue bending and concentrated external load.

Quality Assurance

Provide at least one English speaking person who must be present at all times during execution of this portion of the work and who will be thoroughly familiar with the type of materials being installed and the manufacturer's recommended methods of installation and who must direct all work performed under this section.

Cleanup and Disposal

Dispose of waste, trash, and debris in accordance with applicable laws and ordinances and as prescribed by authorities having jurisdiction. Bury no such waste material and debris on the site. Burning of trash and debris will not be permitted. The Contractor must remove and dispose of rubbish and debris generated by his work and workmen at frequent intervals or when ordered to do so by the Engineer.

At the time of completion the entire site will be cleared of tools, equipment, rubbish and debris which must be disposed of off-site in a legal disposal area.

Turnover Items

Contract documents of Record:

Record accurately on one set of contract documents all changes in the work constituting departures from the original contract documents. The changes and dimensions must be recorded in a legible and workmanlike manner to the satisfaction of the Engineer. Prior to final inspection of work, submit record contract documents to the Engineer. Dimensions from/to permanent points of reference such as buildings, sidewalks, curbs, etc. must be shown. Data on record contract documents must be recorded on a day-to-day basis as the project is being installed. All lettering on contract documents must be minimum 1/8 inch in size.

Show locations and depths of the following items:

- Point of connection (including water P.O.C., master control valves, quick couplers, etc.)
- Irrigation controller

- Routing of new sprinkler pressure lines (dimensions shown at a maximum of 100 feet along routing)
- Isolation valves
- Automatic remote control valves
- Quick coupling valves
- Routing of control wires
- Related equipment (as may be directed)

Maintain record contract documents on site at all times. Upon completion of work, neatly transfer all as-built information and dimensions to clean set of plans and submit to the Engineer.

Controller Charts:

Record contract documents as "Contract Documents of Record" must be approved by the Engineer before charts are prepared.

Provide two (2) revised controller charts for Irrinet controller. Chart size must be 11"x17". Charts must show the area covered by the particular controller for each valve; show all zones; list turf, shrubs, trees, etc; and corresponding controller stations.

The chart is to be a reduced copy of the actual "Contract documents of Record". In the event the controller sequence is not legible when the drawing is reduced, it must be enlarged to a readable size.

When completed and approved, the chart must be hermetically sealed between two pieces of plastic, each piece being minimum 10 mils in thickness.

Operation and Maintenance Manuals:

Bound copies of operation and maintenance manuals must be delivered to the Engineer at least 10 calendar days prior to final inspection. The manuals must describe the material installed and the proper operation of the system.

Each complete, bound manual must include the following information:

- Index sheet stating Contractor's address and telephone number
- Duration of guarantee period
- List of equipment including names and addresses of local manufacturer representatives.
- Operating and maintenance instructions for all equipment
- Spare parts lists and related manufacturer information for all equipment.
- Irrigation schedules.

Equipment - Supply as a part of this contract the following items:

- Two (2) wrenches for disassembly and adjustment of each type of sprinkler head used in the irrigation system.
- Two (2) quick coupler keys with a 1" bronze hose bib, bent nose swivel type with hand wheel and two coupler lid keys.
- One (1) valve box cover key or wrench.
- Four (4) extra sprinkler heads of each size and type.
- And, other turn-over items as stated on the Plans and in City of Tracy Parks and Streetscape Standard Plans.

Turn over contract documents, charts, manuals and extra equipment to the Engineer at time of final walk-through inspection as part of final pre-maintenance acceptance.

Completion

At the time of the pre-maintenance period inspection, the Engineer will inspect the work and if not accepted, will prepare a list of items to be completed by the Contractor. At the time of the post maintenance period or final inspection, the work will be reinspected and final acceptance will be in writing by the Engineer.

After the system has been completed, the Contractor must instruct the Engineer and City's representative in the operation and maintenance of the irrigation system.

The Contractor without any additional expense to the City, must repair any settling of trenches which may occur during the one year period following acceptance, to the City's satisfaction. Repairs must include the complete restoration of all damage to planting, paving or other improvements of any kind as a result of the work.

Guarantee

The entire sprinkler system, including all work done under this contract, must be unconditionally guaranteed against all defects and fault of material and workmanship, including settling of backfilled areas below grade, for a period of one (1) year following the filing of the Notice of Completion.

Should any problem with the irrigation system be discovered within the guarantee period, the Contractor at no additional expense to City must correct it within ten (10) calendar days of receipt of written notice from Owner. When the nature of the repairs as determined by the Owner constitute an emergency (i.e. broken pressure line) the Owner may proceed to make repairs at the Contractor's expense. Any and all damages to existing improvement resulting either from faulty materials or workmanship, or from the necessary repairs to correct same, must be repaired to the satisfaction of the owner by the Contractor, all at no additional cost to the City.

Guarantee must be submitted on Contractors own letterhead as follows:

Guarantee for Sprinkler Irrigation System

We hereby guarantee that the sprinkler irrigation system we have furnished and installed is free from defects in materials and workmanship, and the work has been completed in accordance with the contract documents and specifications, ordinary wear and tear and unusual abuse, or neglect excepted. We agree to repair or replace any defective material during the period of one year from date of filing of the Notice of Completion and also to repair or replace any damage resulting from the repairing or replacing of such defects at no additional cost to the owner. The Contractor must make such repairs or replacements within ten (10) calendar days following written notification by the owner. In the event of our failure to make such repairs or replacements within the time specified after receipt of written notice from owner, we authorize the owner to proceed to have said repairs or replacements made at our expense and we will pay the costs and charges therefore upon demand.

PROJECT NAME:
PROJECT LOCATION:
CONTRACTOR NAME:
ADDRESS:
TELEPHONE:
SIGNED:
DATE:

MATERIALS

Use only new materials of the manufacturer, size and type shown on the contract documents and specifications. Materials or equipment installed or furnished that do not meet City standards will be rejected and must be removed from the site at no expense to the City.

Pipe

New and replacement pressure supply lines 2-1/2 inches in diameter and smaller downstream of the backflow prevention unit must be Class 315 solvent weld PVC conforming to ASTM D1785. Non-

pressure lines 3/4 inch in diameter and larger downstream of the remote control valve must be Schedule 40 solvent weld PVC conforming to ASTM D1785. IPS/Flex Hose: use appropriate solvent weld cement.

Plastic Pipe and Fittings

Pipe must be marked continuously with manufacturer's name, nominal pipe size, schedule or class, PVC type and grade, National Sanitation Foundation approval, Commercial Standards designation, and date of extrusion.

All plastic pipe must be extruded of an improved PVC virgin pipe compound in accordance with ASTM D2241 or ASTM D1785.

All solvent weld PVC fittings must be standard weight Schedule 40 and must be injection molded of an improved virgin PVC fitting compound. Slip PVC fittings must be the "deep socket" bracketed type. Threaded plastic fittings must be injection molded. All tees and ells must be side gated. All fittings must conform to ASTM D2466.

All threaded nipples must be standard weight Schedule 80 with molded threads and must conform to ASTM D1785

All solvent cementing of plastic pipe and fittings must be a two-step process, using primer and solvent cement applied per the manufacturer's recommendations. Cement must be of a fluid consistency, not gel-like or ropy. Solvent cementing must be in conformance with ASTM D2564 and ASTM D2855. Contractor must use type of solvent appropriate to the pipe material or as recommended by pipe manufacturer.

When connection is plastic to metal, female adapters must be hand tightened, plus one turn with a strap wrench. Joint compound must be non-lead base Teflon paste, tape, or equal.

Backflow Prevention Units: Contractor to supply a certified backflow inspection upon completion of mainline connection and provide Engineer with copy of the inspection report.

Valves

Ball valves must be constructed of a bronze body, ball and stem, full port with a malleable iron hand lever. Ball valves must have threaded connections.

All ball valves must have a minimum working pressure of not less than 150 PSI and must conform to AWWA standards.

Quick coupler valves must be brass with a wall thickness guaranteed to withstand normal working pressure of 150 PSI without leakage. Valves must have 1” female threads opening at base, with two-piece body. Valves to be operated only with a coupler key designed for that purpose. Coupler key is inserted into valve and a positive, watertight connection must be made between the coupler key and valve.

Install quick coupler valves in 910 box with T-cover.

All existing quick coupler valves designated to remain, that are located within the cobble or paved areas must be moved outside the cobble area so that edge of valve box is 12” from cobble or concrete.

Automatic remote control valves must be of the manufacturer, size, and type indicated on the contract documents or approved equal.

Automatic remote control valves must be electrically operated, spring loaded, self-cleaning, puckless diaphragm activated normally closed type valve. Valve solenoid must be corrosion-proof and constructed of stainless steel molded in epoxy to form one integral unit, and must be 24 volt A.C.

Flow Meter: Install new Flow Meter as per plans (normally closed valve type.)

Valve Boxes

Valve box covers must be secured installed with T-cover and bolt down option, Carson-Brooks or equal. Boxes, for splices or at turns in mainline which are located in the street, must be Christy Traffic Rated boxes.

The cover and box must be capable of sustaining a load of 1,500 pounds.

Valve box extensions must be by the same manufacturer as the valve box.

Automatic control valve boxes must be 14"x19"x12" rectangular size. Valve box covers must be marked "RCV" with the valve identification number "heat branded" onto the cover in 2 inch high letters / numbers.

Ball valve boxes must be 14” x 19” valve size 1 1/2” and smaller, or in 22”x33” Jumbo boxes for ball valves larger than 1 1/2”. Valve box covers must have 2 inch high letters marked with "BV" "heat branded" onto the cover

Electrical

All electrical equipment must be NEMA type 3, waterproofed for exterior installations. All electrical work must conform to local codes and ordinances. Flow sensor (Bermad) cable must be 14 gauge. Five-(5) control wires will be installed from controller to flow sensors. A no fee permit for all electrical work must be pulled from Building Department.

Low Voltage Control Wiring

Remote control wire must be direct-burial AWG-UF type, size as indicated on the contract documents, and in no case smaller than 14 gauge.

Any new connections must be made with 3M-DBY as per detail D 8.20.

Ground wires must be white in color. Control wires must be red (where two or more controllers are used, the control wires must be a different color for each controller. These colors must be noted on the "Record Contract documents" contract documents located on controller door).

Irrigation Heads:

Irrigation heads must be of the manufacturer, size, type, with radius of throw, operating pressure, and discharge rate indicated on the contract documents.

Irrigation heads must be used as indicated on the drawing.

Automatic controllers:

Install new controller at new location. Controller must be Motorola Irrinet-M 24-station controller as called out on drawings with: UHF CDM750 radio kit; UHF Millenium LO-Pro antenna; 8-station/2 input valve switchboards; Northern Technologies TCS-HW surge protector; assembly, test, and terminate; and 8’ copper clad grounding rod.

EXECUTION

Site Conditions

Inspections:

Prior to all work of this section, carefully inspect the installed work of all other trades and verify that all such work is complete to the point where this installation may properly commence. Verify that irrigation system may be installed in strict accordance with all pertinent codes and regulations, the original design, the referenced standards, and the manufacturer's recommendations.

Discrepancies:

In the event of discrepancy, immediately notify the Engineer. Do not proceed with installation in areas of discrepancy until all discrepancies have been resolved.

Grades:

Before starting work, carefully check all grades to determine that work may safely proceed, keeping within

the specified material depths with respect to finish grade. The Engineer must accept final grades before work on this section will be allowed to begin.

Field Measurements:

Make all necessary measurements in the field to ensure precise fit of items in accordance with the original design. Contractor must coordinate the installation of all irrigation materials with all other work.

All scaled dimensions are approximate. The Contractor must check and verify all size dimensions prior to proceeding with work under this section. Exercise extreme care in excavating and working near existing utilities. Contractor is responsible for damages to utilities, which are caused by his operations or neglect.

Diagrammatic Intent:

The contract documents are essentially diagrammatic. The size and location of equipment and fixtures are drawn to scale where possible. Provide offsets in piping and changes in equipment locations as necessary to conform with structures and to avoid obstructions or conflicts with other work at no additional expense to Owner.

Layout:

Prior to installation, the Contractor must stake out all pressure supply lines, routing and location of sprinkler heads, valves, backflow preventer, and automatic controller.

Layout irrigation system and make minor adjustments required due to differences between site and contract documents. Where piping is shown on contract documents under paved areas, but running parallel and adjacent to planted areas, install the piping in the planted areas.

Water Supply:

Connections to, or the installation of the water supply must be at the locations shown on the contract documents.

Electrical Service:

Connections to the electrical supply must be at the breaker in the electrical panel for the street lights. Contractor to verify that connections from mainlines to existing landscape on the street frontages (east side of Corral Hollow) remain intact and no service is lost. Minor changes caused by actual site conditions must be made at no additional expense to City.

Trenching

Excavations shall be straight with vertical sides, even grade, and support pipe continuously on bottom of trench. Trenching excavation must follow layout indicated on contract documents to the depths below finished grade and as noted. Where lines occur under paved area, these dimensions must be considered below sub-grade.

Provide minimum cover of 18 inches on pressure supply lines in planting areas. Provide minimum cover of 24 inches under paving.

Provide minimum cover of 18 inches for control wires.

Provide minimum cover of 12 inches for non-pressure lines.

Pipes installed in a common trench must have a 6-inch minimum space between pipes.

Backfilling

Backfill material on all lines must be the same as adjacent soil, free of debris, litter, clods and rocks over 1 inch in diameter.

Backfill must be tamped in 4-inch layers under the pipe and uniformly on both sides for the full width of the trench and the full length of the pipe. Backfill materials must be sufficiently damp to permit thorough compaction, free of voids. Backfill must be compacted to original density of soil, and must conform to adjacent grades.

Jetting or flooding in lieu of tamping is not allowed.

Under no circumstances must truck wheels be used to compact backfill.

Provide sand backfill a minimum of 6 inches over and under all piping under paved areas.

Piping

Piping under existing pavement may be installed by jacking, boring, or hydraulic driving. No hydraulic driving is permitted under asphalt pavement.

Cutting or breaking of existing pavement is not permitted.

Carefully inspect all pipe and fittings before installation, removing dirt, scale, burrs, and reaming. Install pipe with all markings up for visual inspection and verification.

Remove all dented and damaged pipe sections.

All lines must have a minimum clearance of 6 inches from each other and 12 inches from lines of other trades.

Parallel lines must not be installed directly over each other.

In solvent welding, use only the specified primer and solvent cement and make all joints in strict accordance with the manufacturer's recommended methods including wiping all excess solvent from each weld. Allow solvent welds at least 15 minutes setup time before moving or handling and 24 hours curing time before filling. PVC pipe must be installed in a manner, which will provide for expansion and contraction as recommended by the pipe manufacturer.

Center load all plastic pipe prior to pressure testing.

All threaded plastic-to-plastic connections must be assembled using Teflon tape or Teflon paste.

For plastic-to-metal connections, work the metal connections first. Use a non-hardening pipe dope an all threaded plastic-to-metal connections, except where noted otherwise. All plastic-to-metal connections must be made with plastic female adapters.

Controller

Irrigation Contractor is responsible for the final electrical hook up to the irrigation controller.

Irrigation system must be programmed to operate during the periods of minimal use of the design area, based on the watering schedule provided.

Control Wiring

Low voltage control wiring must occupy the same trench and must be installed along the same route as the pressure supply lines whenever possible.

Where more than one wire is placed in a trench, the wiring must be taped together in a bundle at intervals of 10 feet. Bundle must be secured to the mainline with tape at intervals of 20 feet.

All connections must be of an approved type and must occur in a valve box. Provide a 36” inch service loop at each connection except where noted on the drawing. An expansion loop of 36” inches must be provided at each wire connection and/or directional change, and one loop of 36 inches must be provided at each remote control valve.

A continuous run of wire must be used between a controller and each remote control valve. Under no circumstances must splices be used without prior approval.

Valves

Automatic control valves, quick coupler, and ball valves are to be installed in the approximate locations indicated on the contract documents.

Valves must be installed in shrub areas whenever possible.

Install all valves as indicated in the detail contract documents.

Valves to be installed in valve boxes must be installed one valve per box.

Valve Boxes

Valve boxes must be installed in shrub areas whenever possible.

Each valve box must be installed on a foundation of 3/4 inch gravel backfill, 3 cubic feet minimum. Valve boxes must be installed with their tops at finish grade in ground cover areas.

Irrigation Heads

Irrigation heads must be installed as indicated on the contract documents.

Spacing of heads must not exceed maximum indicated on the contract documents.

Riser nipples must be of the same size as the riser opening in the sprinkler body.

Miscellaneous Equipment

Install all assemblies specified herein according to the respective detail contract documents or specifications, using best standard practices.

Quick coupler valves must be set approximately 12 inches from walks, curbs, header boards, or paved areas where applicable.

Flushing System

Prior to installation of irrigation heads, the valves must be opened and a full head of water used to flush out the lines and risers.

Irrigation heads must be installed after flushing the system has been completed.

Adjusting the System

Contractor must adjust valves, align heads, and check the coverage of each system prior to coverage test. If it is determined by the Engineer that additional adjustments or nozzle changes will be required to provide proper coverage, all necessary changes or adjustments must be made prior to any planting. The entire system must be operating properly before any planting operations commence. Automatic control valves are to be adjusted so that the irrigation heads operate at the pressure recommended by the manufacturer.

Testing Equipment

Do not allow or cause any of the work of this section to be covered up or enclosed until it has been observed, tested and accepted by the Engineer. Mainline must be tested at 125 PSI and held for 2 ½ hours with no leaks. No pressure loss will be allowed.

The Contractor is solely responsible for notifying the Engineer, a minimum of 48 hours in advance, where and when the work is ready for testing.

When the sprinkler system is completed, the Contractor must perform a coverage test of each system in its entirety to determine if the water coverage for the planted areas is complete and adequate in the presence of the Engineer.

The Contractor must furnish all materials and perform all work required to correct any inadequacies of coverage due to deviations from the contract documents, or where the system has been willfully installed as indicated on the contract documents when it is obviously inadequate, without bringing this to the attention of the Engineer. This test must be accepted by the Engineer and accomplished before starting any planting.

Final inspection will not commence without record contract documents as prepared by the Irrigation Contractor.

Maintenance

During the maintenance period the Contractor must adjust and maintain the irrigation system in a fully operational condition providing complete irrigation coverage to all intended plantings.

Completion Cleaning

Clean-up must be made as each portion of the work progresses. Refuse and excess dirt must be removed from the site, all walks and paving must be broomed, and any damage sustained on the work of others must be repaired to original conditions.

Irrigation System Design and Water Supply

The irrigation system designed is based upon a minimum available water pressure of 50 PSI at a flow rate of 50 GPM. Individual stations are designed to this minimum PSI.

The system is also designed to withstand a maximum pressure of 125 PSI. Contractor must verify the existing working water pressure at the water supply location shown on the contract documents prior to starting construction. The Contractor must notify the Engineer in writing of any discrepancies noted. Failure to provide such written notification must result in the Contractor being required to provide modifications to the irrigation system as necessary to achieve a fully operational systems providing 100% coverage, at no additional charge to the City.

MEASURE AND PAYMENT

Irrigation System is paid for on a lump sum basis. Measurement will be based on the percentage of work completed as determined by the Engineer. The contract lump sum price paid for the Landscape Irrigation System must include full compensation for furnishing all labor, materials, tools, equipment, trenching, backfill, paving, irrigation controller, backflow certification, water system connection, testing, and incidentals required for doing all the work involved in installing the irrigation system complete in place and operational, as shown on the contract documents and as directed by the Engineer, and no additional compensation will be allowed.

Progress payments will be based on the percentage of work completed as determined by the Engineer.

City Standard Plans

Landscape Planting and Irrigation Systems must follow the City of Tracy Engineering Design & Construction Standards (December 2008), including amendments thereto are by reference a part of the specifications for this project, and all materials and construction must be in strict conformance with these except as modified herein. It is the Contractors responsibility to thoroughly review and understand all of the requirements stated and referenced. The following City Standard Plans are representative of those specifically referenced in these technical specifications and are provided for convenience to the Contractor. The Contractor is responsible to maintain and have available for reference by field and office personnel a complete set of all project specific and referenced plans and specifications.

Parks & Streetscape Standard Plans

D 1.9	Surfaces – Cobble Paving
D 1.10	Rock Fines
D 7.0	Planting – General Guidelines (Sections C and F)
D 7.2	Planting – Tree Planting
D 7.2.1	Planting – Shrub Planting
D 7.4.1	Planting – Tree Staking & Planting
D 7.6	Planting – Ground Cover
D 7.7	Planting – Vines
D 7.8	Planting – Turf
D 7.9	Planting – Triangular Spacing
D 7.11	Planting – Concrete Mow Strip

D 8.3 Irrigation – 12” Popup Shrub Rotor
D 8.4.2 Irrigation – 12” Popup Shrub Spray
D 8.7 Irrigation – Shrub Bubbler
D 8.11 Irrigation – Tree Bubblers in Areas with Surface Spray
D 8.11.1 Irrigation – Tree Bubblers in Areas without Surface Spray
D 8.13.1 Irrigation – Reduced Pressure Backflow Assembly
D 8.13.2 Irrigation – Backflow Assembly Enclosure
D 8.13.3 Irrigation – Flow Meter
D 8.14 Irrigation – Ball Valve
D 8.15 Irrigation – Trenching Detail
D 8.17 Irrigation – Quick Coupling Detail
D 8.18.1 Irrigation – Remote Control Valve
D 8.18.2 Irrigation – Valve Box
D 8.20 Irrigation – Wire Connector, 3M-DBY
D 8.21 Irrigation – Controller in Enclosure (Motorola – Irrinet-Ace (4 Sheets)

21 EROSION CONTROL

Add to section 21-1.01B:

The certificate of compliance for weed-free straw must include the *Certificate of Quarantine Compliance*.

Add to section 21-1.02I:

Straw must be weed free. Weed-free straw must comply with the Department of Food and Agriculture's certification requirements for weed-free straw.

^^^

DIVISION V SURFACINGS AND PAVEMENTS

39 HOT MIX ASPHALT

Add to section 39-1.01A:

Produce and place HMA Type A under the Standard construction process.

Add to section 39-1.02C:

Asphalt binder used in HMA Type A must be PG64-10.

^^

THIS PAGE INTENTIONALLY LEFT BLANK

DIVISION VI STRUCTURES

47 EARTH RETAINING SYSTEMS

47-1 GENERAL

Replace section 47-1.01 with:

47-1.01 GENERAL

Section 47 includes specifications for constructing earth retaining systems.

The earth retaining systems must be constructed in stages to account for the settlement as specified in these special provisions.

Add to section 47-2.01A:

You may use an alternative earth retaining system for the mechanically stabilized embankment at Retaining Wall No.1, Retaining Wall No.2, Retaining Wall No.3, Retaining Wall No.4 and Retaining Wall No.5. The alternative system must comply with section 47-6.

Add to section 47-2.01C:

Submit project information for at least three previous, similar and successfully performing applications of the specific wall system proposed. Submit 3 projects where the design heights were greater than 30' and anticipated settlement was greater than 12". Submit additional 3 projects having acute corners less than 60 degrees and section designed as a bin wall.

47-2.01C(1) Shop Drawings

Submit shop drawings with design calculations for the mechanically stabilized earth walls. Submit 6 sets of shop drawings and 2 sets of design calculations. The design and independent check calculations must be sealed by two different registered professional engineers (civil or structural), at least one of whom shall be registered in the State of California. The contract plans must be sealed by a professional engineer (civil or structural) registered in the State of California. The calculations must include designs and evaluations for the required limit states. The mechanically stabilized earth walls must be compliance with the AASHTO LRFD Bridge Specifications, fourth edition, 2007 with 2008 interims and latest Caltrans amendments. Include the following:

1. Design and independent check calculations for:
   a. External Stability (if soil reinforcing lengths are shortened from that shown)
   b. Internal Stability
   c. Panel and panel connections
   d. Bin wall sections
   e. Obtuse corners
   f. Return wall corners
   g. Slip joints
2. Assembly plans including slip joints locations, calculations, staged construction, and details
3. Aesthetic details
4. Installation plan
5. Contingency plan for unanticipated movements and remediating unanticipated movements.

Review time for mechanically stabilized earth walls shop drawings is 30 days, not including UPRR review which can be up to 75 days review time.

47-2.01C(2) MSE Preconstruction Meeting

Schedule and hold a preconstruction meeting for mechanically stabilized earth walls (1) at least 5 business days after submitting the mechanically stabilized earth wall installation plan and (2) at least 10 days before the start of mechanically stabilized earth construction. You must provide a facility for the meeting.

The meeting must include the Engineer, your representatives, and any subcontractors involved in mechanically stabilized earth wall construction.

The purpose of this meeting is to:

1. Establish contacts and communication protocol between you and your representatives, any subcontractors, and the Engineer
2. Review the construction process, and contingency plan for remediating unanticipated movements, walls out of plumb, corner construction.

Replace the 2nd paragraph of section 47-2.01D with:

Coupler test samples must comply with minimum tensile specifications for steel wire in ASTM A 82/A 82M. Total wire slip must be at most 3/16 inch when tested under the specifications for tension testing of round wire test samples in ASTM A 370.

Add to section 47-2.02B:

Slip joint panels, corner units and raised strip (smooth face) panels must be integrally pigmented colored concrete as shown. Comply with section 51.

Replace "78-80" in the 1st table in the 2nd paragraph of section 47-2.02C with:

78-100

Replace the value for the sand equivalent requirement in the 2nd table in the 3rd paragraph of section 47-2.02C with:

12 minimum

Replace the 1st paragraph of section 47-2.02E with:

Steel wire must comply with the specifications for plain wire reinforcement in ASTM A1064/A1064M. Welded wire reinforcement must comply with the specifications for plain wire welded wire reinforcement in ASTM A1064/A1064M.

Hooks and bends must comply with the Building Code Requirements for Structural Concrete published by ACI.

Add to section 47-2.02E:

Ribbed Reinforcing Strips must comply ASTM A-572, Grade 65 (AASHTO M-223) Galvanizing must comply with the requirements of ASTM A123 (AASHTO M-111). The minimum galvanizing coating thickness must be 2 ounces/square feet.

Tie Strips must comply with ASTM A-1011, Grade 50. Galvanizing must comply with ASTM A-123 (AASHTO M-111) or ASTM A-153 (AASHTO M-232). The minimum galvanizing coating thickness must be 2 ounces/square feet.

Wire Tie Strips and Loop Inserts must comply with ASTM A-82. Galvanizing must comply with ASTM A-123 (AASHTO M-111). The minimum galvanizing coating thickness must be 2 ounces/square feet.

Fasteners for Tie Strips must be Hexagonal cap screw bolts and nuts. Cap screws must comply with ASTM A-449 (AASHTO M-164) or equivalent. Galvanizing for cap screws must comply with ASTM A-153 (AASHTO M-232).

Structural Plate Connectors used to connect soil reinforcement to wall panels and splice ribbed reinforcing strips must conform to ASTM A-36. Structural Plate Connectors must be galvanized. Galvanizing must comply with ASTM A-123 (AASHTO M-111). The minimum galvanizing coating thickness must be 2 ounces/square feet.

Add to section 47-2.03B(1):

You must not fabricate or install the top panel of each wall until authorized by the Engineer. You must place the embankment established by inclined planes sloping 1.5:1 (horizontal: vertical) from 1' below top of second panel to the top of the embankment. Once the embankment has reached acceptable settlement limits, you will be notified that you can fabricate and install the top panel.

Add to section 47-6.01A:

The alternative earth retaining system manufacture must be in good standing on the Caltrans pre-approved alternative earth retaining system list and must be one of the systems shown in the following table:

Reinforced Earth – 5 ft square (Steel strap soil reinforcement with 5 ft square concrete face panels)	http://www.reinforcedearth.com	THE REINFORCED EARTH COMPANY 1660 HOTEL CIR N STE 304 SAN DIEGO CA 92108-2803	(619) 688-2400
MSE Plus – 5 ft square (Steel mesh soil reinforcement with 5 ft square concrete face panels)	http://www.mseplus.com	SSL 4740 SCOTTS VALLEY DR STE E 209 SCOTTS VALLEY CA 95066-4240	(831) 430-9300
MSE Plus – 5 by 6 ft (Steel mesh soil reinforcement with 5 ft high by 6 ft wide concrete face panels)	http://www.mseplus.com	SSL 4740 SCOTTS VALLEY DR STE E 209 SCOTTS VALLEY CA 95066-4240	(831) 430-9300

Panels must be square or rectangular. Modular block walls and battered walls are not allowed.

Soil reinforcement must be galvanized steel.

Panels must be placed vertical. Battered systems are not allowed.

If soil reinforcement connection to concrete panels have not been tested and accepted by Caltrans, you are responsible for designing and testing the connection.

Wall system must be designed to accommodate differential settlement of 1 foot in 100 feet. You are responsible for installing slip joints at intervals such that differential settlement does not exceed 1 foot in 100 feet.

Settlement is anticipated due to the approach roadway fill placement. Maximum settlement is on the order of 15.8" for the bridge approaches and 8.6" for the detour bridge approaches. Stated settlement is approximate and the actual settlement may be more or less than these values stated. You are responsible for designing the walls to accommodate this settlement and maintain true lines and grades for the panels.

You are responsible for designing bin wall sections.

Add to section 47-6.01C:

Submit project information for at least three previous, similar and successfully performing applications of the specific wall system proposed. Submit 3 projects where the design heights were greater than 30' and anticipated settlement was greater than 12". Submit additional 3 projects having acute corners less than 60 degrees and section designed as a bin wall.

47-6.01C(1) Shop Drawings

Submit shop drawings with design calculations for the mechanically stabilized earth walls. Submit 6 sets of shop drawings and 2 sets of design calculations. The design and independent check calculations must be sealed by two different registered professional engineers (civil or structural), at least one of whom shall be registered in the State of California. The contract plans must be sealed by a professional engineer (civil or structural) registered in the State of California. The calculations must include designs and evaluations for the required limit states. The mechanically stabilized earth walls must be in compliance with the AASHTO LRFD Bridge Specifications, fourth edition, 2007 with 2008 interims and latest Caltrans amendments. Include the following:

1. Design and independent check calculations for:
   a. External Stability (if soil reinforcing lengths are shortened from that shown)
   b. Internal Stability
   c. Panel and panel connections
   d. Bin wall sections
   e. Obtuse corners
   f. Return wall corners
   g. Slip joints
2. Assembly plans including slip joints locations, calculations, and details
3. Aesthetic details
4. Installation plan
5. Contingency plan for unanticipated movements and remediating unanticipated movements.

47-6.01C(2) MSE Preconstruction Meeting

Schedule and hold a preconstruction meeting for mechanically stabilized earth walls (1) at least 5 business days after submitting the mechanically stabilized earth wall installation plan and (2) at least 10 days before the start of mechanically stabilized earth construction. You must provide a facility for the meeting.

The meeting must include the Engineer, your representatives, and any subcontractors involved in mechanically stabilized earth wall construction.

The purpose of this meeting is to:

1. Establish contacts and communication protocol between you and your representatives, any subcontractors, and the Engineer
2. Review the construction process, and contingency plan for remediating unanticipated movements, walls out of plumb, corner construction.

Replace the 6th paragraph in section 47-6.01C with:

Allow 75 days for the Department's review.

Replace the 5th paragraph of section 47-6.03 with:

The coping lip or barrier slab lip must cover the top of face panels at least 7 inches.

Add to section 47-6.03:

You must not fabricate or install the top panel of each wall until authorized by the Engineer. You must place the embankment established by inclined planes sloping 1.5:1 (horizontal: vertical) from 1' below top of second panel to the top of the embankment. Once the embankment has reached acceptable settlement limits and, in the sole opinion of the Engineer, the settlement has ceased, you will be notified that you can fabricate and install the top panel.

Add Section 47-7 Temporary Retaining Wall

47-7.01 General

47-7.01A Summary

Section 47-6 includes specifications for constructing the temporary retaining walls.
You must design temporary retaining system.

47-7.01B Definitions

Reserved

47-7.01C Shop Drawings

Submit shop drawings that are independently checked for the temporary retaining systems. Submit 6 sets of shop drawings and 2 sets of design calculations. The design calculations and plans must be sealed by a registered professional engineer (civil or structural) in the State of California. The calculations must include designs and evaluations for the required limit states, including all railing loads and special designs for openings through the walls. The temporary retaining walls must be in compliance with the AASHTO LRFD Bridge Specifications, fourth edition, 2007 with 2008 interims and latest Caltrans amendments.

Submit shop drawings for the temporary retaining system to the Engineer. Submit from 6 sets of final shop drawings as requested for final authorization. Include the following:

1. All information required for construction of the system at each location
2. Existing ground line at the wall face
3. Design parameters, material notes, and wall construction procedures
4. Proposed drainage
5. All railing layouts including anchorage details
6. All protrusions through wall

Verify existing ground elevations before submitting drawings.

Allow 30 days for review.

47-7.01D Quality Control And Assurance

Reserved

47-7.02 Materials

Reserved

47-7.03 Construction

Construct the structure to the lines and grades shown.

47-7.04 Payment

Reserved

^^

48 TEMPORARY STRUCTURES

Replace "Reserved" in section 48-3 with:

48-3.01 GENERAL

48-3.01A Summary

Section 48-3 includes specifications for providing temporary supports for splicing the girders.
Temporary supports must include required accessories to support girder segments.

48-3.01B Definitions

frame: the portion of a bridge between expansion joints.

48-3.01C Submittals

48-3.01C(1) General

Submit 2 copies of the initial location survey signed by an engineer who is registered as a civil engineer in the State.
Submit a copy of the monitoring record after completing girder splicing at construction of each splice location.

48-3.01C(2) Shop Drawings

Submit shop drawings with design calculations for the temporary support system. Submit 6 sets of shop drawings and 2 sets of design calculations. Include the following:

1. Descriptions and values of all loads, including construction equipment loads.
2. Descriptions of equipment to be used.
3. Details and calculations for supporting the girder segments.
4. Stress sheets, anchor bolt layouts, shop details, and erection and removal plans for the temporary supports.
5. Assumed soil bearing values and design stresses for temporary support footings, including anticipated foundation settlement.
6. Details for additional bracing required during erection and removal of temporary supports.
7. Details of the displacement monitoring system, including equipment, location of control points, and methods and schedule of taking measurements.
8. Details for adjusting grade if settlement occurs in the temporary supports.

Existing bents may be used as temporary supports. Calculations must show a summary of computed stresses in (1) temporary supports, (2) connections between temporary supports and the girder segments to be spliced, and (3) existing load-supporting members. Calculations must include a lateral stiffness assessment of the temporary support system.

Shop drawings and calculations must be signed by an engineer who is registered as a civil engineer in the State.

Review time for temporary support shop drawings is 75 days.

For temporary supports within railroad right of way, authorization of shop drawings is contingent upon the drawings being satisfactory to the railway company involved.

48-3.01D Quality Control and Assurance

48-3.01D(1) General

Welding, welder qualification, and welding inspection for temporary supports must comply with AWS D1.1.

Before erecting girder segments, an engineer who is registered as a civil engineer in the State must inspect and certify that (1) the temporary supports, and displacement monitoring system comply with the authorized shop drawings and (2) the materials and workmanship are satisfactory for the work. A copy of this certification must be available at the job site at all times.

An engineer who is registered as a civil engineer in the State must:

1. Be present during temporary support erection and adjustments, girder segment erection, deck concrete placement and during temporary support removal activities.
2. Immediately submit proposed procedures to correct or remedy unplanned occurrences.

48-3.01D(2) Displacement Monitoring

Monitor and record vertical and horizontal displacements of the temporary supports and the existing structure. Use vandal-resistant displacement monitoring equipment. Perform monitoring continuously during girder erection, girder closure pours and during deck construction. Make monitoring records available at the job site during normal work hours. Monitoring records must be signed by an engineer who is registered as a civil engineer in the State.

As a minimum, monitor the girders at the support locations. Locate control points at each support location. As a minimum, take elevations at the following times:

1. Before starting girder erection
2. Immediately after completing erection
3. After pouring girder diaphragms
4. Before pouring concrete deck
5. After pouring concrete deck
6 After removing temporary supports

Perform an initial survey to record the location of the existing structure before starting work.

48-3.01D(3) Design Criteria

The Engineer does not authorize temporary support designs based on allowable stresses greater than those specified in section 48-2.01D(3)(c).

If falsework loads are imposed on temporary supports, the temporary supports must also satisfy the deflection criteria in section 48-2.01D(3)(c).

The temporary support system must support the minimum temporary support design loads and forces shown. Adjust vertical design loads for the weight of the temporary supports and construction equipment loads. Construction equipment loads must be at least 20 psf of deck surface area of the frame involved.

Temporary supports must resist the specified lateral design forces applied at the point where the girder segments meets the temporary support. If the temporary support lateral stiffness exceeds the specified minimum stiffness, increase the lateral design forces to be compatible with the temporary support stiffness.

Place temporary supports resisting transverse lateral loads within 1/2 of the span length from the existing bent. Place temporary supports resisting longitudinal lateral loads where the girder segments are to be spliced.

You may use the permanent piles as part of the temporary support foundation. Do not move or adjust permanent piles from the locations shown. If you install permanent piles longer than described to support the temporary supports above the top of the footing and later cut off the piles at their final elevation, you must use shear devices adequate to transfer all pile reactions into the footing.

Design temporary support footings to carry the loads imposed without exceeding the estimated soil bearing values or anticipated settlements. You must determine soil bearing values.

Where temporary supports are placed on the deck of an existing structure:

1. Temporary supports must bear either (1) directly on girder stems or bent caps of the supporting structure or (2) on falsework sills that transmit the load to the stems or cap without overstressing any member of the new or existing structure.
2. Temporary supports must not induce permanent forces into the completed structure or produce cracking.
3. Place additional temporary supports beneath the existing structure where temporary support loads are imposed on the existing structure. Design and construct the additional temporary supports to support all loads from the upper structure and construction activities.

Provide additional bracing as required to withstand all imposed loads during each phase of temporary supports erection and removal. Include wind loads complying under section 48-2.01D(3)(b) in the design of additional bracing.
Mechanically connect (1) the existing structure to the temporary supports and (2) the temporary supports to their foundations. Mechanical connections must be capable of resisting the lateral design forces. Friction forces developed between the existing structure and temporary supports (1) are not considered an effective mechanical connection and (2) must not be used to reduce lateral forces. However, a friction factor between the temporary support foundations and the existing soil may be used to resist lateral loads.
Design mechanical connections to accommodate adjustments to the temporary support frame during use.
If the concrete is to be prestressed, design temporary supports to support changes to the loads caused by prestressing forces.

Temporary supports must comply with section 48-2.01D(3)(d).

48-3.02 MATERIALS

Manufactured assemblies must comply with section 48-2.01D(3)(c)(iv).

48-3.03 CONSTRUCTION

Where described, install temporary crash cushion modules under section 12-3.15 before starting temporary support activities. Remove crash cushion modules when authorized.

The construction sequence and temporary support loads is described. You may submit proposed changes to the Engineer for authorization.

Construct temporary supports under section 48-2.03C.

After construction activities, the monitored control points must not deviate by more than 1/4 inch from the initial vertical survey elevations or other authorized elevations.

Remove temporary supports under section 48-2.03D. If traffic is carried on the structure on temporary supports, do not release temporary supports until the supported concrete has attained 100 percent of the specified strength.

Remove attachments from the existing structure. Restore concrete surfaces to original conditions except where permanent alterations are shown.

48-3.04 PAYMENT

Not Used

Replace "Reserved" in section 48-6 with:

48-6 Temporary Prefabricated Modular Steel Truss Bridge:

48-6.01 GENERAL

48-6.01A Summary

Section 48-6 includes specifications for furnishing and erecting a temporary prefabricated modular steel truss bridge.

Truck traffic data (AADT) is 2141.

A minimum of 2" asphalt concrete must be used for deck surface of Temporary Prefabricated Modular Steel Truss Bridge.

48-6.01B Definitions

Not used

48-6.01C Submittals

Reserved

48-6.01C(1) Shop Drawings

Submit shop drawings with design calculations for the temporary prefabricated modular steel truss bridge, vehicular guard railing, interior pedestrian railing and exterior pedestrian railing. Submit 6 sets of shop drawings and 2 sets of design calculations. The design and independent check calculations must be sealed by two different registered professional engineers (civil or structural), at least one of whom shall be registered in the State of California. The Manufacturer's Engineer is responsible for providing the design calculations, assembly plans, and member and connection details. The contract plans must be sealed by a professional engineer (civil or structural) registered in the State of California. The calculations must include designs and evaluations for the required limit states and criteria specified in Section 48-6.01D(2). Include the following:

1. Design calculations.
2. Independent check calculations
3. Descriptions of equipment to be used.
4. Assembly plans
5. Member and connection details

Review time for temporary prefabricated modular steel truss bridge shop drawings is 30 days. This does not include UPRR review time and approval, which may take up to 75 days.

For temporary prefabricated modular steel truss bridge over railways, authorization of shop drawings is contingent upon the drawings being satisfactory to the railway company involved.

48-6.01D Quality Control and Assurance

48-6.01D(1) General

Manufacturer must be AISC certified for Simple Steel Bridges or have ISO 9001 certification for fabrication of structural steel products.

Manufacturer must visually inspect members for signs of distress and indication of previous inelastic behavior.

Manufacturer visually inspects welds for adequate size, condition, and quality on every component fabricated.

Manufacturer must provide a Quality Certification regarding material fabrication and quality control plan. Manufacturer may have to perform some testing for those welded components without a quality control plan and to provide working drawings per recommendations of the Engineer.

Manufacturer must be present during the assembly, installation and removal of the temporary bridge.

Manufacturer must provide a Certification of Compliance certifying that the components including bolts, pins, truss members and floor beams, welding, assembly, installation and conditions comply with the specifications. New bolts must be used for all panel connections.

Manufacturer must provide inspections and reports on condition of the installation, of the bridge components, and any related aspect of the project with potential impact on the bridge performance every three months. If the Manufacturer can provide the age and history of the bridge and its components, then the manufacturer may be allowed to inspect the bridge every 6 months that is in service as authorized by the Engineer.

The sidewalk on the temporary bridge and approaches must meet all ADA requirements. All gaps and joints must be less than ½" within the walking surface.

48-6.01D(2) Design Criteria

The temporary prefabricated modular steel truss bridge must be in compliance with the current Caltrans adopted AASHTO LRFD Bridge Design Specifications with California Amendments for the following limit states:

Limit States	
Strength I	HL-93 must be the minimum design vehicular live load. The Strength I load combination must also include a lateral force of not less than 0.3 kip/ft. as a permanent load with a factor of 1.0, applied at the top of the chord panel points of each side truss of a bridge.
Strength II	9-axle Permit Truck (i.e, the permit truck specified in the current Caltrans Amendments Article 3.6.1.8 with the first nine axles configuration) in a maximum of two separate lanes placed to cause maximum effect.
Strength III	Wind Load
Fatigue	Fatigue truck specified by AASHTO LRFD Article 3.6.1.4 with consideration of anticipated service life and truck traffic data. For used trusses, their past service life must be considered.
Extreme Event I	See Acceleration Response Spectrum (Temporary Bridge) included in the Foundation Report included in the Appendices of these Special Provisions.
Service I vehicular live load deflection limit	Side truss span Length/1000

The temporary prefabricated modular steel truss bridge must meet one of the following stability criteria:

a. K-factor procedure – The top chord must be considered as a column with elastic lateral supports at the panel points. The compression resistance must be in accordance with the current Caltrans adopted AASHTO LRFD Bridge Design Specifications with California Amendments with the effective length factor, K, obtained from Table 1 (Galambos, T.V. 1998. Guide to Stability Design Criteria for Metal Structures, 5th Edition, John Wiley & Sons, Inc., New York, NY.).

Symbols in Table 1 are defined as follows:

C = lateral stiffness of the U-frame (Figure 1) made of the one side of truss verticals and the floorbeam (kip/in.)

L = length of the chord between panel points (in.)
P_c = desired critical buckling load (kip) of the truss chord member in one side of the bridge, which shall be taken as 1.33 times the factored compressive load
n = number of truss panels in the vertical plan on one side of the bridge along its span length

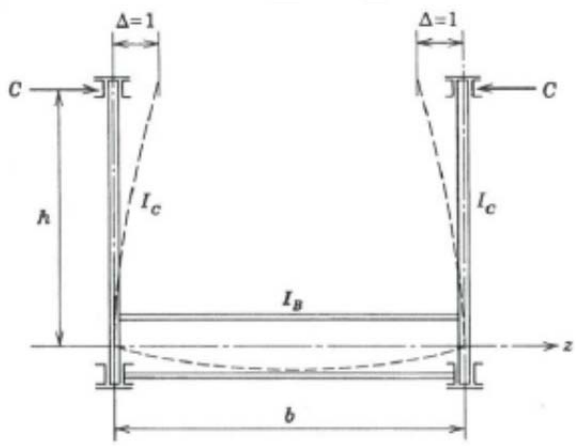

Figure 1 U-Frame

The lateral stiffness, C, may be estimated by the following equation

$$C = \frac{E}{h^2\left[\left(h/3I_c\right)+\left(b/2I_B\right)\right]}$$

Δ = lateral deflection resulting from lateral load C and shown schematically in Figure 1 (in.)
h = height of truss measured from the center lines of the top chord member to the center line of floor beam (in.)
b = spacing between center lines of trusses (in.)
I_c = equivalent moment of inertia of truss verticals of one panel point in one side of the bridge (in.^{4})
I_b = moment inertia of the floor beams (in.^{4})
E = modulus of elasticity of the truss material (ksi)

Table 1 – Values of 1/K for Various Values of CL/P_c and n

1/K	n =4	n = 6	n = 8	n = 10	n = 12	n = 14	n = 16	Lutz-Fisher (1985, Eq. 15-8)
	CL/P_c							
1.000	3.686	3.616	3.660	3.714	3.754	3.785	3.809	4.000
0.980		3.284	2.944	2.806	2.787	2.771	2.774	3.730
0.960		3.000	2.665	2.542	2.456	2.454	2.479	3.478
0.950			2.595					
0.940		2.754		2.303	2.252	2.254	2.282	3.244
0.920		2.643		2.146	2.094	2.101	2.121	3.026

0.900	3.352	2.593	2.263	2.045	1.951	1.968	1.981	2.822
0.850		2.460	2.013	1.794	1.709	1.681	1.694	2.372
0.800	2.961	2.313	1.889	1.629	1.480	1.456	1.465	1.993
0.750		2.147	1.750	1.501	1.344	1.273	1.262	1.673
0.700	2.448	1.955	1.595	1.359	1.200	1.111	1.088	1.401
0.650		1.739	1.442	1.236	1.087	0.988	0.940	1.169
0.600	2.035	1.639	1.338	1.133	0.985	0.878	0.808	0.970
0.550		1.517	1.211	1.007	0.860	0.768	0.708	0.798
0.500	1.750	1.362	1.047	0.847	0.750	0.668	0.600	0.648

b. Second-order Analysis Procedure – In lieu of the K-factor procedure, the stability of the top chords of the truss may be evaluated by using a second order numerical analysis procedure provided the following aspects are included in the model.
   - A lateral out-of-plumbness of h/500 in the transverse direction, where h is the truss height.
   - Initial out-of-straightness of Length/1000, both between panel points and across the entire length of the compression chord.
   - Effects of the stiffness of vertical to floorbeam connections.

Vehicular guard railing must be designed for TL-4 loading. Design and check calculations must include calculations that show that the guard railing can handle the TL-4 forces and that these forces can be transmitted from the guard railing to the bridge structural members. The guard railing must have a maximum post spacing of 10'-0". Each individual post must be able to handle a minimum of TL-2 forces. Either the top surface of the top horizontal rail must be a minimum of 4'-0" above the roadway surface <u>or</u> the traffic side face of the horizontal rail must be set a minimum distance of 15" in front of the truss. The maximum clear opening between horizontal rails must meet the AASHTO requirements for vertical clear openings shown on Figure A13.1.1-2 of the *AASHTO LRFD Bridge Design Specifications, Fourth Edition*. The clear opening below the bottom horizontal rail to the top of curb must be 10" maximum. The vehicular guard railing must also meet all geometric requirements specified for bicycle railings from the *AASHTO LRFD Bridge Design Specifications, Fourth Edition with California Amendments.*

Exterior pedestrian railing and interior pedestrian railing on the prefabricated sidewalk must meet all geometric and load requirements specified for pedestrian railing from the *AASHTO LRFD Bridge Design Specifications, Fourth Edition with California Amendments.* Exterior pedestrian railing on prefabricated sidewalk shall be a minimum of 10'-0" tall. Exterior pedestrian railing must meet all UPRR requirements including that openings must not exceed 2 inches.

The contractor must seal the gaps between the ends of the steel curbs placed at the edges of the roadway surface at the deck joint locations such that storm water will be contained on the roadway surface and will not fall off of the bridge.

48-6.03 CONSTRUCTION

Contractor must install the bridge to comply with the manufacturer's design and installation details.

48-6.04 PAYMENT

Payment for Temporary Prefabricated Modular Steel Truss Bridge includes 2" asphalt concrete deck surface.
No additional payment will be made for cambering the bridge or adjusting the vertical profile if necessary to maintain the minimum vertical clearance shown when accounting for all anticipated deflections.

^^

49 PILING

Add to section 49-1.03:

Expect difficult pile installation due to the conditions shown in the following table:

Pile location		Conditions
Bridge no.	Support location	
29C-0465 (new br. no.)	Abutment 1	Medium to dense clayey silt, loose to slightly compact silty sand, caving soils, high ground water, limited clearance to due proximity of MSE Walls, limited clearance due to proximity to UPRR tracks
29C-0465 (new br. no.)	Abutment 2	Medium to dense clayey silt, loose to slightly compact silty sand, caving soils, high ground water, limited clearance to due proximity of MSE Walls, limited clearance due to proximity to UPRR tracks
Temporary Bridge	Abutment 1	Medium to dense clayey silt, loose to slightly compact silty sand, caving soils, high ground water, limited clearance to due proximity of MSE Walls, limited clearance due to proximity to UPRR tracks
Temporary Bridge	Abutment 2	Medium to dense clayey silt, loose to slightly compact silty sand, caving soils, high ground water, limited clearance to due proximity of MSE Walls, limited clearance due to proximity to UPRR tracks

Due to the difficult pile installation conditions, CIDH construction methods must utilize full length temporary casings either rotated or oscillated into place. The temporary casings must be removed using the same method as installation. Augment casing with slurry to prevent heaving of the soil at the pile tip.

Add to section 49-3.02A(1):

Contractor constructing both the temporary and permanent piles must have completed at least 5 jobs using full length temporary casing in similar soils installed by either the rotator or oscillator methods. Contractors must provide a list of projects to the engineer. Contractors that do not possess this experience will be deemed to be not qualified.

Replace "Reserved" in section 49-3.02A(4)(b) with:

Schedule and hold a preconstruction meeting for CIDH concrete pile construction (1) at least 5 business days after submitting the pile installation plan and (2) at least 10 days before the start of CIDH concrete pile construction. You must provide a facility for the meeting.

The meeting must include the Engineer, your representatives, and any subcontractors involved in CIDH concrete pile construction.

The purpose of this meeting is to:

1. Establish contacts and communication protocol between you and your representatives, any subcontractors, and the Engineer

2. Review the construction process, acceptance testing, and anomaly mitigation of CIDH concrete piles

The Engineer will conduct the meeting. Be prepared to discuss the following:

1. Pile placement plan, dry and wet
2. Acceptance testing, including gamma-gamma logging, cross-hole sonic logging, and coring
3. *Pile Design Data Form*
4. Mitigation process
5. Timeline and critical path activities
6. Structural, geotechnical, and corrosion design requirements
7. Future meetings, if necessary, for pile mitigation and pile mitigation plan review
8. Safety requirements, including Cal/OSHA and Tunnel Safety Orders

Add to section 49-3.02B(6)(c):

The synthetic slurry must be one of the materials shown in the following table:

Material	Manufacturer
SlurryPro CDP	KB INTERNATIONAL LLC 735 BOARD ST STE 209 CHATTANOOGA TN 37402 (423) 266-6964
Super Mud	PDS CO INC 105 W SHARP ST EL DORADO AR 71731 (870) 863-5707
Shore Pac GCV	CETCO CONSTRUCTION DRILLING PRODUCTS 2870 FORBS AVE HOFFMAN ESTATES IL 60192 (800) 527-9948
Terragel or Novagel Polymer	GEO-TECH SERVICES LLC 220 N. ZAPATA HWY STE 11A-449A LAREDO TX 78043 (210) 259-6386

Use synthetic slurries in compliance with the manufacturer's instructions. Synthetic slurries shown in the above table may not be appropriate for a given job site.
Synthetic slurries must comply with the Department's requirements for synthetic slurries to be included in the above table. The requirements are available from the Offices of Structure Design, P.O. Box 168041, MS# 9-4/11G, Sacramento, CA 95816-8041.

SlurryPro CDP synthetic slurry must comply with the requirements shown in the following table:

SLURRYPRO CDP

Property	Test	Value
Density During drilling Before final cleaning and immediately before placing concrete	Mud Weight (density), API 13B-1, section 1	 ≤ 67.0 pcf[a] ≤ 64.0 pcf[a]
Viscosity During drilling Before final cleaning and immediately before placing concrete	Marsh Funnel and Cup. API 13B-1, section 2.2	 50–120 sec/qt ≤ 70 sec/qt
pH	Glass electrode pH meter or pH paper	6.0–11.5
Sand content, percent by volume Before final cleaning and immediately before placing concrete	Sand, API 13B-1, section 5	≤ 0.5 percent

[a]If authorized, you may use slurry in salt water. The allowable density of slurry in salt water may be increased by 2 pcf.
Slurry temperature must be at least 40 degrees F when tested.

Super Mud synthetic slurry must comply with the requirements shown in the following table:

SUPER MUD

Property	Test	Value
Density During drilling Before final cleaning and immediately before placing concrete	Mud Weight (Density), API 13B-1, section 1	 ≤ 64.0 pcf[a] ≤ 64.0 pcf[a]
Viscosity During drilling Before final cleaning and immediately before placing concrete	Marsh Funnel and Cup. API 13B-1, section 2.2	 32–60 sec/qt ≤ 60 sec/qt
pH	Glass electrode pH meter or pH paper	8.0–10.0
Sand content, percent by volume Before final cleaning and immediately before placing concrete	Sand, API 13B-1, section 5	≤ 0.5 percent

[a]If authorized, you may use slurry in salt water. The allowable density of slurry in salt water may be increased by 2 pcf.
Slurry temperature must be at least 40 degrees F when tested.

Shore Pac GCV synthetic slurry must comply with the requirements shown in the following table:

SHORE PAC GCV

Property	Test	Value
Density During drilling Before final cleaning and immediately before placing concrete	Mud Weight (Density), API 13B-1, section 1	 ≤ 64.0 pcf[a] ≤ 64.0 pcf[a]
Viscosity During drilling Before final cleaning and immediately before placing concrete	Marsh Funnel and Cup. API 13B-1, section 2.2	 33–74 sec/qt ≤ 57 sec/qt
pH	Glass electrode pH meter or pH paper	8.0–11.0
Sand content, percent by volume Before final cleaning and immediately before placing concrete	Sand, API 13B-1, section 5	≤ 0.5 percent

[a]If authorized, you may use slurry in salt water. The allowable density of slurry in salt water may be increased by 2 pcf.
Slurry temperature must be at least 40 degrees F when tested.

Terragel or Novagel Polymer synthetic slurry must comply with the requirements shown in the following table:

TERRAGEL OR NOVAGEL POLYMER

Property	Test	Value
Density During drilling Before final cleaning and immediately before placing concrete	Mud Weight (Density), API 13B-1, section 1	 ≤ 67.0 pcf[a] ≤ 64.0 pcf[a]
Viscosity During drilling Before final cleaning and immediately before placing concrete	Marsh Funnel and Cup. API 13B-1, section 2.2	 45–104 sec/qt ≤ 104 sec/qt
pH	Glass electrode pH meter or pH paper	6.0–11.5
Sand content, percent by volume Before final cleaning and immediately before placing concrete	Sand, API 13B-1, section 5	≤ 0.5 percent

[a]If authorized, you may use slurry in salt water. The allowable density of slurry in salt water may be increased by 2 pcf.
Slurry temperature must be at least 40 degrees F when tested.

Add to section 49-3.02C(8):

Liquid materials encountered or used in CIDH pile construction cannot be treated and discharged into City sewer system or drainage/irrigation canals.

Add to section 49-3.02D:

Payment for 96” diameter CIDH Piling includes any additional concrete that is poured for installation of the permanent steel casing.

^^

51 CONCRETE STRUCTURES

Add to section 51-1.01A:

The concrete at concrete barrier and pilasters must be integrally pigmented colored concrete.

Construct a test panel at the job site before placing the permanent concrete barrier and pilasters.

Add to section 51-1.02B:

Aggregate for Precast/Prestressed Girder and Cast-In-Place girder closure pour segments must be the half-inch combined aggregate complying with section 90-1.02C(4)(d).

Add to section 51-1.01C(1):

Submit shop drawings with design calculations for any junction structure constructed within Railroad right of way. Submit 6 sets of shop drawings and 2 sets of design calculations. The calculations must be sealed by a registered professional engineer (civil or structural in the State of California). The calculations must include design and evaluations for the required limit states and criteria specified in *AASHTO LRFD Bridge Design Specifications, Fourth Edition with California Amendments* and latest AREMA specifications. Include the following:

1. Design calculations.
2. Construction equipment to be used
3. Shoring plans if required

Review time for the junction structure shop drawings within Railroad right of way is 75 days.

Add to section 51-1.01C(1):

If the methacrylate crack treatment is performed within 100 feet of a residence, business, or public space, submit a public safety plan that includes the following:

1. Public notification letter with a list of delivery and posting addresses. The letter must describe the work to be performed and state the treatment work locations, dates, and times. Deliver the letter to residences and businesses within 100 feet of overlay work and to local fire and police officials not less than 7 days before starting overlay activities. Post the letter at the job site.
2. Airborne emissions monitoring plan. A CIH certified in comprehensive practice by the American Board of Industrial Hygiene must prepare and execute the plan. The plan must have at least 4 monitoring points including the mixing point, application point, and point of nearest public contact. Monitor airborne emissions during overlay activities.
3. Action plan for protecting the public if levels of airborne emissions exceed permissible levels.
4. Copy of the CIH's certification.

After completing methacrylate crack treatment activities, submit results from monitoring production airborne emissions as an informational submittal.

Replace 1st paragraph of section 51-1.01D(4)(a) with:

The Contractor tests roadway surfaces for smoothness, coefficient of friction, and crack intensity.

Replace Section 51-1.01D(4)(b) Surface Smoothness with:

The Contractor tests the surface smoothness of the following:

1. Completed roadway surfaces of structures and approach slabs and the adjacent 50 feet of approach pavement

2. Surfaces of concrete decks to be covered with another material

Before the testing, clean the test area and remove obstructions.
Except for POCs, surface smoothness is tested using a bridge profilograph under California Test 547. Two profiles are obtained in each lane approximately 3 feet from the lane lines and 1 profile is obtained in each shoulder approximately 3 feet from the curb or rail face. Profiles are taken parallel to the direction of traffic.

Deck surfaces must comply with the following smoothness requirements:
1. Profile trace having no high points over 0.02 foot
2. Profile count of 5 or less in any 100-foot section for portions within the traveled way
3. Surface not varying more than 0.02 foot from the lower edge of a 12-foot-long straightedge placed transversely to traffic

Grind surfaces not complying with the smoothness requirements under section 42-3 until the required smoothness is attained. Grinding must not reduce the concrete cover on reinforcing steel to less than 1-1/2 inches.
Replace portions of decks that cannot be corrected by grinding.

Replace Section 51-1.01D(4)(c) Coefficient of Friction with:

After deck surfaces and approach slabs have been textured, the Contractor tests the coefficient of friction of the concrete surfaces under California Test 342.
If portions of completed deck surfaces or approach slabs have a coefficient of friction of less than 0.35, those portions must be ground to produce a coefficient of friction of not less than 0.35 or grooved parallel to the center line. Grinding and grooving must comply with section 42.

Add to section 51-1.04:

Structure Concrete, (Barrier Slab) includes score lines.

Replace "Not Used" in section 51-3.02D with:

Payment for Steel Reinforced Elastomeric Bearing Pads is included in Structure Concrete (Bridge). Any change in concrete quantity as a result of any adjustment to the seat elevations based on actual bearing pad thickness compared to that shown on the plans does not change the quantity.

Add to section 51-4.03B:

Except for box girders and double T girders, provide temporary lateral bracing for girders over Union Pacific Railroad Right of Way. Install bracing at each end of the girder segments and at the midspan. Bracing must be in place before releasing erection equipment and must remain in place until 48 hours after concrete diaphragms are placed.

Design temporary bracing to prevent overturning and resist the lateral pressures shown in the following table.

Structure height, H (feet above ground)	Lateral pressure[a] (psf)
$0 < H \leq 30$	15
$30 < H \leq 50$	20
$50 < H \leq 100$	25
$H > 100$	30

[a]Apply the lateral pressure at the top of the girder in either direction.

Add to section 51-5.04:

Structure Concrete, Approach Slab includes score lines.

Add to section 51-7.01A:

Includes cast-in-place concrete collars, and lateral side connections.

Add to section 51-7.01D:

Payment for Minor Structure (Outfall Structure) includes all work associated with the outfall structure including headwalls, wingwalls, channel lining, bar reinforcement, welded wire fabric, structural excavation, and structural backfill.

Replace "Reserved" in section 51-7.02 with:

51-7.02A General

51-7.02A(1) Summary

Section 51-7.02 includes specifications for constructing PC drainage inlets and PC junction structures.

51-7.02A(2) Definitions

Reserved

51-7.02A(3) Submittals

For inlets with oval or circular cross sections outside of railroad right of way, submit shop drawings with calculations. Shop drawings and calculations must be sealed and signed by an engineer who is registered as a civil engineer in the State. Allow 15 days for the Engineer's review.

For inlets with oval or circular cross sections inside of railroad right of way, submit shop drawings with calculations. Shop drawings and calculations must be sealed and signed by an engineer who is registered as a civil engineer in the State. Allow 75 days for the Engineer's review.

Submit field repair procedures and a patching material test sample before repairs are made. Allow 10 days for the Engineer's review.

51-7.02A(4) Quality Control and Assurance

The Engineer may reject PC drainage inlets exhibiting any of the following:

1. Cracks passing through walls more than 1/16 inch wide
2. Nonrepairable honeycombed or spalled areas of more than 6 square inches
3. Noncompliance with reinforcement tolerances or cross sectional area shown
4. Wall or lid less than minimum thickness
5. Internal dimensions less than plan dimensions by 1 percent or 1/2 inch, whichever is greater
6. Defects affecting performance or structural integrity

51-7.02B Materials

Not Used

51-7.02B(1) General

Nonshrink grout must be a dry, packaged type complying with ASTM C 1107.

Concrete for basin or inlet floors placed in the field must comply with the specifications for minor concrete.

Joint sealant must be butyl-rubber complying with ASTM C 990. Joint primer must be recommended by the joint seal manufacturer.

Resilient connectors must comply with ASTM C 923.

Sand bedding must comply with section 19-3.02E.

Bonding agents must comply with ASTM C 1059, Type II.

51-7.02B(1) Fabrication

If oval or circular shape cross-sections are furnished, they must comply with *AASHTO LRFD Bridge Design Specifications, Fourth Edition with California Amendments*.

Wall and slab thicknesses may be less than the dimensions shown by at most 5 percent or 3/16 inch, whichever is greater.

Reinforcement placement must not vary more than 1/2 inch from the positions shown.

Cure PC drainage inlets under section 90-4.03.

51-7.02C Construction

Repair PC drainage inlet sections to correct damage from handling or manufacturing imperfections before installation.

Center pipes in openings to provide a uniform gap. Seal gaps between the pipe and the inlet opening with nonshrink grout under the grout manufacturer's instructions. For systems designated as watertight, seal these gaps with resilient connectors.

Match fit keyed joints to ensure uniform alignment of walls and lids. Keys are not required at the inlet floor level if the floor is precast integrally with the inlet wall. Seal keyed joint locations with preformed butyl rubber joint sealant. You may seal the upper lid and wall joint with grout.

Clean keyed joint surfaces before installing sealant. Joint surfaces must be free of imperfections that may affect the joint. Use a primer if surface moisture is present. Use a sealant size recommended by the sealant manufacturer. Set joints using sealant to create a uniform bearing surface.

Flat drainage inlet floors must have a field-cast topping layer at least 2 inches thick with a slope of 4:1 (horizontal: vertical) toward the outlet. Use a bonding agent when placing the topping layer. Apply the bonding agent under the manufacturer's instructions.

51-7.02D Payment

Payment for Junction Structure includes all work associated with the structure including bar reinforcement, grout, concrete, structure excavation, and structure backfill.

^^^

1913 LINCOLN HIGHWAY 1928

In the 1800's the United States was experiencing its industrial revolution. Inventors were running rampant. The new horseless carriage was the rage. America soon realized that the horse and buggy were a thing of the past. Bicyclists, having trouble dealing with the rutted roads, organized a "Good Roads Movement" which was quickly adopted by the early motorists. Then in 1908 a true visionary, named Henry Ford, began producing an automobile for the working man. Before long practically everyone owned a "Model T." However a new problem arose – Where to drive these new motorcars? What would later become roads were, at this time, no more than trails and wagon ruts. Other than wagon trails such as the Oregon, California, Old Emigrant and Santa Fe, there were virtually no roads connecting cities across our country. In 1912 another visionary by the name of Carl Fisher, President of the Prest-O-Lite automotive lighting company and developer of the Indianapolis Motor Speedway and Miami Beach, Florida, came up with the idea to build an all season road across the United States. An Association was formed and dedicated on October 31,1913. The Associations Proclamation read:

"The purpose of this Association is: To immediately promote and procure the establishment of a continuous improved highway from the Atlantic to the Pacific, open to lawful traffic of all descriptions, without toll charges and to be of concrete wherever practicable. This highway is to be known, in memory of Abraham Lincoln, as 'The Lincoln Highway.'"

When first mapped out in 1913, the Lincoln was 3,389 miles in length. By 1924, due to realignments, it had been shortened to 3,142 miles. The Highway passed through 13 states before reaching California beginning at Times Square in New York City, and terminating at Lincoln Park in San Francisco. It was hoped that the highway would be completed before the 1915 opening of the Panama-Pacific Exposition in San Francisco.

The route was charted and many sections improved, but the highway was not fully paved until the early 1930's. The fact that there was a marked route across the continent drew thousands to California. The Lincoln Highway became known as "America's First Coast to Coast Highway," "Main Street Across America" and "America's First Promoted Transcontinental Highway." The Association, feeling that its mission had been accomplished, ceased financial involvement in 1928, but remained active in promoting the highway into the 1940's. Lt. Dwight David Eisenhower travelled the Highway through Tracy in 1919, as part of a military convoy. As President, he relied on that experience and that of seeing the German Autobahn to promote the Interstate Highway System in the 1950's. No other enterprise has done more to allow freedom of travel and promote Interstate Commerce. In 1913 the Lincoln Highway followed 11th Street through Tracy, crossing the Transcontinental Railroad, where this bridge stands today. The routing of the highway through Tracy contributed greatly to the City's growth, and as early as 1918 motorists travelling through Tracy saw the development of electrical shops, automobile garages, filling stations and restaurants. From 1926 – 1933 the highway was officially signed US 48, and US 50 from 1934 – 1972.

–Gary Kinst, Lincoln Highway Historian

^^^

DIVISION VII DRAINAGE

65 CONCRETE PIPE

Add to Section 65-2.02E Joints

For RCP storm drain pipes, you must use bell and spigot gasketed joints unless otherwise shown.

^^^

2.2. The pressure required to produce and maintain a flow of 1 gallon per minute for a period of 10 minutes through the sidewalls and out the unsealed end of test samples must not exceed 15 pounds per square inch when the samples are embedded in a glassbead-aggregate soil matrix.

The test procedure for determining flow capacity characteristics of fabricated drainage wicks consists of placing a 14-inch-long sample of the drainage wick that has been sealed at 1 end in a test chamber, centered along its longitudinal axis, so that 12 inches of the sample is exposed to the flow within the chamber and the unsealed end of the sample extends out of the top of the chamber. Place samples of the spliced drainage wick in the test chamber with 12 inches of the splice exposed to flow within the chamber or, if the splice is less than 12 inches long, with the spliced portion of the sample in the top portion of the chamber. The inside diameter of the test chamber must be at least 3/4 inch greater than the width of the test sample. Introduce water into the test chamber through an inlet centered in the bottom of the chamber. Measure pressure with a strain gage pressure tap installed in the test chamber at approximately mid-depth. Water used in determining flow capacity characteristics must be potable tap water. Each test sample of spliced and unspliced drainage wick must 1st be tested for flow capacity when immersed in water only and then for flow capacity if embedded in a glassbead-aggregate soil matrix. The glassbead-aggregate soil matrix must consist of inert glass beads and soil and must comply with the following requirements:

1. Gradation:

Sieve sizes	Percentage passing
No. 4	100
No. 8	77
No. 16	63
No. 30	42
No. 50	19
No. 100	7
No. 200	3
No. 270	0

2. The material passing the no. 4 sieve and retained on the no. 50 sieve must comply with section 90-1.02C(3). The material passing the no. 50 sieve and retained on the no. 270 sieve must consist of inert glass beads.
3. The glass beads and soil must be thoroughly mixed while damp, carefully installed around the test sample of drainage wick in the test chamber, and compacted by rodding.

Splices in drainage wicks will be permitted if the splices are fabricated in a workmanlike manner and if authorized.

The horizontal strip drains must consist of a polymeric core enclosed in a suitable filter material and shall be spaced and arranged as shown or as otherwise authorized by the engineer.
The horizontal strip drain shall be a prefabricated type made up of a polymeric drainage core wrapped in a filter made of non-woven fabric of continuous filaments of 100% polypropylene. The core shall be fabricated with suitable drainage channels.
The horizontal strip drain shall have the following minimum properties:

Core		
Thickness	1 inch	
Width	6 inches	
Compressive Strength	9000 lb/ft^2	ASTM D1621
Flow Rate	20 gpm/ft.	ASTM D4716

Fabric		
Grab Tensile Strength	90 lbs	ASTM D4632
Grab Elongation	40%	ASTM D4632
Puncture Strength	50 lbs	ASTM D4833
Mullen Burst Strength	185 psi	ASTM D3786
AOS, U.S. Std. Sieve	70 sieve	ASTM D4751
Permittivity	150 gpm/ft^2	ASTM D4491
UV Resistance, @500 hrs	70% retained	ASTM D4355
Fungus Resistance	No Growth	ASTM D 1612

68-6.03 CONSTRUCTION

Before installation of the drainage wicks, demonstrate that the proposed equipment and methods will produce satisfactory installations of authorized drainage wicks and horizontal strip drains. Install trial drainage wicks and horizontal strip drains at locations designated by the Engineer.

Use a driving sleeve to install drainage wicks. The driving sleeve must protect the drainage wick from tears, cuts, and abrasions during installation and must be retracted after each drainage wick is installed. The cross section of the driving sleeve must be of a shape that will produce minimum disturbance of the soil surrounding the installed drainage wick and must not exceed 12 square inches in area. The tip of the driving sleeve must cut through the filter fabric layer cleanly without tearing, gathering, folding, or otherwise distressing or stressing the fabric.

Do not install drainage wicks by jetting or impact methods.

You may use augering or other methods to loosen the soil and permeable material before installation of drainage wicks if authorized and if the augering does not penetrate more than 1 foot into the underlying compressible native soil and does not tear, gather, fold or otherwise disturb or stress the filter fabric layer.

Equipment for installing drainage wicks must be plumbed before installing each wick and must not deviate from vertical by more than 0.1 foot in 10 feet during installation of the wicks. Drainage wicks that are out of proper location by more than 6 inches or are damaged or improperly installed will be rejected. You may remove or abandon in place rejected drainage wicks, except remove rejected wicks that interfere with installation of replacement wicks or other authorized wicks.

Mark drainage wick locations on the ground.

Drainage wicks must be installed from the working surface to the depth shown or designated by the Engineer.

Provide the Engineer with a suitable means of determining the quantity of drainage wick installed at each location and provide a suitable means for the Engineer to determine the depth of the wick at any given time.

Drainage wicks must be cut off neatly at the ground line at the location shown.

Horizontal strip drains must be placed on the ground in their proper location with respect to the drainage wicks, as indicated on the plans or as authorized by the Engineer. The locations of the horizontal strip drains must not vary by more than 6 inches from the locations indicated on the plans or as authorized by the Engineer. Horizontal strip drains that are out of their proper location by more than 6 inches or horizontal strip drains that are damaged in construction, or horizontal strip drains that are improperly completed will be rejected by the Engineer, and no compensation will be allowed for any materials furnished or any work performed on such drains. The wick drain extensions must be routed to the horizontal strip drains as indicated on the plans, these specifications, or as authorized by the Engineer. The wick drains must be securely attached to the horizontal drains (staked, nailed or held by mounded earth).

Acceptance by the Engineer of the method and equipment used to install the horizontal strip drains must not constitute, necessarily, acceptance of the method for the remainder of the project. If at any time the Engineer considers that the method of installation does not produce a satisfactory horizontal strip drain, the Contractor must alter the method and/or equipment as necessary to comply with these specifications.

Splices or connections in the drainage material must be done in a workmanlike manner so as to insure continuity of the horizontal strip drain.

After being directed by the engineer, all horizontal main drains outside permanent MSE walls (Areas 1, 2, 3, and 4 shown on "Construction Details" sheet CD-11) must be abandoned a minimum of 2 feet below the finished grade. After being directed by the engineer, all horizontal main drains and horizontal collector drains at the temporary detour approach locations (Areas 5 and 6 on "Construction Details" sheet CD-12) must be removed from the project site and properly disposed of. After being directed by the engineer, all vertical drains at the temporary detour approach locations must be abandoned a minimum of 2 feet below the finished grade.

68-6.04 PAYMENT

The Department does not pay for trial drainage wicks that are not part of the work. Horizontal strip drains, excavation/backfill, and temporary collector ditches are included in the payment for Drainage Wick.

^^

70 MISCELLANEOUS DRAINAGE FACILITIES

Replace the 6th paragraph in section 70-1.04 with:

Quantities of pipe for energy dissipators are measured to the nearest 0.1 foot of pipe. Payment for reinforcement and risers are included in the payment for the types of inlets and manholes shown in the Bid Item List.

Add to section 70-1.04:

Payment for precast drainage inlets includes all work associated with the inlet including frames, grates, covers, bar reinforcement, inlet depressions, drainage inlet markers, concrete, structure excavation, and structure backfill.

Replace the 2nd paragraph in section 70-5.04 with:

The following items are included in the payment for miscellaneous drainage facilities:

1. Steel cover
2. Frame and grate
3. Frame and cover
4. Manhole frame and cover
5. Manhole frame and grate
6. Manhole frame and cover (pressure)

Replace section 70-5.05B(2) with:

70-5.05B(2) Drainage Gates for Low Head Pressure

Drainage gates for low pressure head must be designed to operate under 10 feet of head face pressure. Head face pressure is measured from the center of the gate cover to the highest water level. Drainage gates must:

1. Provide free outflow
2. Prevent backflow
3. Be attached to the pipe or anchored to a concrete wall

Drainage gates include the cover, spigot-back seat, gate links, bushings, bolts, and nuts.

Drainage gate cover and spigot-back seat must be manufactured of cast iron complying with ASTM A 126, Class B. The drainage gate links must be manufactured of steel complying with ASTM A 36/A 36M.

The bushings must be manufactured of commercial quality bronze. The assembly bolts, anchor bolts, and nuts must comply with ASTM A 307, Grade A. The gate links, bolts, and nuts must be galvanized and comply with ASTM A 153.

The drainage gate cover must be ribbed or domed and of ample section to withstand the face pressure. The seating surfaces of the cover and spigot-back seat must be machined or ground to fit together within a tolerance of not more than 0.004-inch throughout the circumference of the seating surfaces.

The drainage gate cover must be hinged from the spigot-back seat by 2 supporting links with 1 on each side of the gate. The links must be pivotally connected at the top of the seat and at the bottom to the cover above the center of gravity. Bushings of suitable length and diameter must be provided at the 4 hinge points.

The drainage gate must be assembled in the shop. Shop coat cast iron parts with commercial quality asphaltic paint.

The cover of the installed drainage gate must fit tight against the seat when there is no pressure on the cover face.

The cover must be equipped with an eye bolt at the bottom for opening the gate under pressure.

^^

Replace Section 71 with:

71 TEMPORARY DETOUR DRAINAGE

71-1.01 General

Section 71 includes general specifications for furnishing, placing, and connecting temporary detour drainage systems, including drainage basin, inlets, pipes, connections, drainage swales, temporary culverts, rock slope protection, excavation and backfill, removal of existing lateral connections to existing 48” storm drain, and monitoring the drainage system.
You must submit an item list indicating the type of pipe culvert, connections, inlet type, drain appurtenances, risers, and grates used.
If temporary detour drainage system shown conflicts with or is not acceptable based on temporary retaining wall used, you must redesign drainage system to accommodate your chosen temporary retaining wall system. Submit redesign drainage system if necessary for acceptance.

71-1.01A Submittals

Reserved

71-1.01A(1) Shop Drawings

Submit shop drawings for the temporary detour drainage.

71-1.02 Materials

Not Used.

71-1.03 Construction

Excavation and backfill for temporary drainage system must comply with section 19.
Where drain inlets or manholes are in paved or surfaced areas, do not construct the drain to final grade until the paving or surfacing has been completed immediately adjacent to the drain.

You must ensure the scuppers in the Temporary Railing (Type K) are clear and free of debris at all times until the temporary detour is removed.
The size of retention basin must be of adequate size to handle expected storm drain events and contractor is responsible for monitoring/maintaining basin, modifying basin, or pumping water to ensure that water it doesn't spill out of basin.

71-1.04 Payment

Payment for pipe components that are not made of pipe, and drainage stubs is included in payment for temporary drainage system.
Payment for constructing pipe riser connections and bar reinforcement steel riser safety cages is included in the payment for temporary drainage system.

Removal of the temporary drainage system is paid for as Remove Temporary Detour.

^^

^^^

Replace section 75-1.03H with:

75-1.03H Isolation Casings

Isolation casing consists of installing steel plate or corrugated steel pipe to isolate a support from the surrounding soil.

Corrugated steel pipe must comply with section 66-1 and be made from zinc-coated steel sheet. Before cleaning and painting, slightly round sharp edges and edges that are marred, cut, or roughened in handling or installation. Clean edges of the pipe as specified for repairing damaged galvanized surfaces in section 75-1.05.

Where shown, paint galvanized steel surfaces under section 59-3.

Neoprene strips must comply with the specifications for strip waterstops in section 51-2.05 except that protective board is not required.

Structure backfill must comply with section 19-3.02B. Compact structure backfill to a relative compaction of at least 90 percent.

Place structure backfill under section 19-3.03E. Do not pond or jet the backfill.

^^

77 LOCAL INFRASTRUCTURE

SECTION 77-1 – WATER SERVICES

77-1.01 GENERAL CONDITIONS

General

All work will be completed as per Plans and City Standards, in proper sequence as per the Phased Construction Schedule Plan, and as authorized directed by the Engineer.

Phased Construction Schedule Plan

Contractor must prepare a Schedule of Values and a Phased Construction Schedule Plan and obtain approval by the City Engineer prior to commencement of any construction work. See Hydraulic Water System Analysis Technical Memorandum for conceptual phased construction sequence. The Phased Construction Schedule Plan must include a precise phasing schedule that will be followed for installation and connection of new water mains, valves, and other equipment/facilities, and must also include a phased schedule and coordination to disconnect, abandon-in-place or the demolition/removal of identified sections of the water mains, valves and other identified equipment/facilities.

The Phased Construction Schedule Plan must also include and emphasize the required coordination with the Engineer, city public works department, other public agencies or utility companies (if required or necessary), the notification process and coordination with affected water service customers (consumers), as well as all other requirements as so authorized or directed by the Engineer.

Before the Contractor starts to prepare the Phased Construction Schedule Plan, the Contractor must contact the City Engineer and acquire all project-specific details and other information that will be important and helpful in preparation of the Phased Construction Schedule Plan. This information and data will generally define and outline the critical phasing issues, timetables, necessary coordination steps, and other specific information and data that may be available from any technical reports. However it is the sole responsibility of the Contractor to prepare the actual “final” Phased Construction Schedule Plan, get it reviewed/authorized by the City Engineer, and implement the plan prior to commencement of any construction.

Maintaining Existing Water Service

The Contractor must not shut down or interrupt flow through the existing water system and fire hydrants unless specifically permitted to do so, in writing, by the City Engineer.

The Contractor must notify the City in writing of any proposed shutdown of any city water facility, and approximate duration thereof, a minimum of three-(3) days in advance. Include date, time and extent of duration of shutdown in the written notification.

The Contractor must notify all affected consumers, in writing, twenty-four-(24) hours prior to shutdown, including the date, time, reason for shutdown, and extent of duration of the shutdown.

The Contractor must immediately prior to individual service work, notify the consumer(s) again to verify that all water use has been stopped.

As a safety precaution, the Contractor should be involved in the Lock-Out Tag-Out (LOTO) procedure, and provide their own set of locks and tags to be placed along with the City's locks and tags when shutting down a utility.

The Contractor must bear all responsibility for any loss or damage arising out the failure of any such consumer to receive notice of proposed shutdown or interruption of service.

The Contractor must restore water service as soon as possible and immediately notify the City Engineer of said restoration of service.

77-1.02 DEMOLITION / REMOVAL OF (E) WATER MAINS, FACILITIES AND EQUIPMENT

The Contractor must demolish/remove and legally dispose of the miscellaneous water pipe, valves, and other materials/equipment/facilities as shown on the Plans in accordance with Section 300.02 of the City of Tracy Standard Specifications. The Contractor's work will include the following:

Remove (E) Water Service and Cap at Main including water service saddle, as per Plans (see Plans, Water Keynote DW01) and City Standards. The water main line must be capped/sealed using a full circle repair coupling. Contractor is responsible for legally disposing of all unwanted materials and equipment.

Remove (E) FH, FS & Protection Bollards & Cap at Main as per Plans (see Plans, Water Keynote DW02) and City Standards. The water main must be capped/sealed using a full circle repair coupling. All existing fire hydrants must be salvaged and delivered to the City of Tracy Corporation Yard at 520 Tracy Boulevard. The Contractor is responsible for legally disposing of all unwanted materials and equipment.

Remove (E) FH & Cap at Main as per Plans (see Plans, Water Keynote DW04) and City Standards. The water main must be capped/sealed using a full circle repair coupling. All existing fire hydrants must be salvaged and delivered to the City of Tracy Corporation Yard at 520 Tracy Boulevard. The Contractor is responsible for legally disposing of all unwanted materials and equipment.

Remove (E) 12", 18" and 20" Water Mains, Valves, Etc. and the water lines being capped/sealed at the main lines or flanges as per Plans (see Plans, Water Keynote DW03) and City Standards. Contractor is responsible for legally disposing of all removed water valves and other unwanted materials, or if so directed by Engineer, the water valves must be salvaged and Contractor must deliver them to the City of Tracy Corporate Yard at 520 Tracy Boulevard.

MEASUREMENT AND PAYMENT

Payment for furnishing all labor, materials, tools, equipment, and incidentals and for doing all the work involved in modifying the water line system as shown on the plans and specified in these special provisions, and as authorized by the Engineer, is included in the payment for Water Line Modifications. No additional compensation will be allowed.

77-1.03 FURNISH AND INSTALL (N) 6" AND 20" WATER PIPE MAINS

General

The Contractor's work will include furnishing and installing 6" Class 50 DIP water pipe, 6" Class 50 DIP FS Extension and Cap water pipe installed as per Standard Plan 40 without fire hydrant (see Plans, Water Keynote W03), and 20" Class 50 DIP main line water pipe including pipe fittings and accessories as shown on the Plans and as per City Specifications.

Water pipe and fittings must be ductile iron pipe (DIP) conforming to the requirements of Section 207.04 of the City of Tracy Standard Specifications. All buried metal pipe and fittings must be double poly-wrapped with 8-mil thick polyethylene protective wrapping in accordance with the requirements of Section 207.04 of the City Standard Specifications to prevent contact with surrounding backfill material.

All water piping, valves, components, appurtenances and hardware used on this project must be fully restrained joint type pipe and fittings. Thrust blocks must be installed where specified on the Plans and be in conformance with City Standard Plan 423.

The Contractor must submit to the Engineer for review and approval the following information prior to construction:

- Product data on pipe material, fittings, and accessories to be used in construction.
- Manufacturer's certificate certifying the product meets or exceeds the specified requirements.

The Contractor must store and handle all pipe material per the manufacturer's recommendations. Do not place pipe or pipe materials on private property or in areas obstructing pedestrian or vehicle traffic. Block individual and stockpiled pipe lengths to prevent moving.

Prior to project closeout, the Contractor must record actual locations of piping mains, valves, connections, thrust restraints, and invert elevations.

Materials

Water Pipe: All water mains and fittings must be ductile iron manufactured in conformance with the requirements of ANSI/AWWA C151/A21.51 and Section 207.04 of the City of Tracy Standard Specifications. Pipe must be cement mortar lined, must conform to the provisions of AWWA C151 and C104 and must have "Tyton" type joints. Standard bituminous coating must be applied to the outside of the pipe by the manufacturer. Pipe thickness must be designed in accordance with ANSI/AWWA C150/A21.50 "Thickness Design of Ductile-Iron Pressure Pipe," and must be based on laying conditions and internal pressures as stated in the project Plans and Specifications.

Restrained joint fittings and the restraining components must be ductile iron in accordance with applicable requirements of ANSI/AWWA C110/A21.10 and/or C153/A21.53 with the exception of the manufacturer's proprietary design dimensions.

Restrained joint pipe and fittings must be U.S. Pipe's TR FLEX Pipe and Fittings or approved equal. Restraint of field cut pipe must be provided with U.S. Pipe's TR FLEX GRIPPER® Ring or approved equal. Restrained push-on joints for pipe and fittings must be designed for a water working pressure of 350 psi.

Construction

The Contractor must construct the pipe trench in accordance with the project Geotechnical Report, and City of Tracy Standard Plan No. 501 with the following exceptions:

Bedding "A" and Bedding "B" must be Class 2 AB or controlled low strength material (CLSM) where Class 2 AB cannot be properly compacted.

Note 1: Unsuitable sub-grade material (i.e., where trench bottoms are unstable, disturbed by construction activity, or where excavation occurs) as determined by the Engineer, must be excavated and replaced with clean, natural durable 1½" crushed rock with the following grading.

Foundation Material	
Sieve Size	**Percent Passing**
2”	100
1½”	90 – 100
¾”	0 – 30
3/8”	0 – 20
No. 200	0 – 4

The thickness of this foundation material must be to a depth where a firm base can be created, but must not be less than 12” thick. The 1½” crushed rock must be wrapped with a geotextile fabric having a minimum 12” overlap. The geotextile fabric must be a non-woven material consisting of polyester, nylon or polypropylene filaments formed into a stable network and conforming to the properties on the table below. The fabric is to be permeable, inert to commonly encountered chemicals, rot-proof, resistant to ultra-violet light, and not act as a wicking agent.

Geotextile Fabric		
Property	**Test Value**	**ASTM Test Method**
Weight	5.4 oz./yd.^{2} (min)	D5261
Grab tensile strength	150 lb. (min)	D4632
Elongation at break	50% (max)	D4632
Puncture strength	80 lb. (min)	D4833
Burst Strength	300 psi (min)	D3786
Apparent Opening Size	#70 (max)	D4751
Permittivity	1.0 sec $^{-1}$ (min)	D4491
UV Resistance	70% (min)	D4355

The trench must be constructed to allow accurate placement of pipe in the horizontal alignment and to the elevations indicated on the plans. The Contractor must place bedding material at the trench bottom and level fill materials in one continuous layer not exceeding 6 inches and compacted according to the plans. Handle and install the pipe in accordance with manufacturer’s recommendations, per the plans, and to AWWA C600. Install pipe to allow for expansion and contraction without stressing pipe or joints. Install pipe to have bearing along entire length of pipe. Flange or bell holes must be excavated out at each pipe joint to ensure uniform pipe barrel support to proper line and grade over the full length of each pipe segment. Contractor must prevent dirt, sand, gravel or other foreign matter from entering the pipe and sockets of the pipe and fittings. Close pipe openings with watertight plugs during work stoppages.

After the pipe is placed in the trench, pipe embedment material is to be uniformly placed in maximum 8-inch thick loose lifts on each side of the pipe and hand-shovel sliced under the pipe haunches to support the sides of the pipe and prevent pipe displacement and compact according the plans. Backfilling of the trench must not commence until after the pipe bedding has been tested and approved. Trench backfill material is to be placed in maximum loose lifts of 8 inches above the pipe embedment material and compacted according to the plans. Jetting of trench or pit backfill is not allowed. Maintain optimum moisture content of bedding material to attain the relative compaction required on the plans. Relative compaction as referenced herein is in accordance with ASTM D1557. It is the Contractor’s responsibility to protect the pipeline from damage at all times, including during the placement and compaction of

surrounding and overlying backfill materials. The City will perform in place compaction tests every 100 feet in paved areas, every 250 feet in unimproved areas and for each 2 vertical feet of backfill depth for both paved and unimproved areas. In place compaction tests must be in accordance with the following:

Density Tests: ASTM D6938 – 08a.

Moisture Tests: ASTM D2216 or ASTM D3017.

The Contractor must place a #8 magnetic detectable conductor trace wire along the top of the pipe. The trace wire must have a brightly colored plastic covering. The Contractor must place a bright colored, plastic ribbon, non-detectable, warning tape above the water pipe. The warning tape must be a minimum of 6 inches wide and 4 mil thick, continuously printed with the words "Caution Buried Water Line Below" (or approved substitute) and placed no more than 24-inches below the finished grade. Contractor must slurry fill all currently abandoned and existing utilities to be abandoned that are within 1-foot parallel to proposed utilities. Contractor must use "1-sack" slurry mix. Cost for this work must be included in this bid item.

The Contractor must flush and disinfect the system and perform a pressure test on the potable water distribution system in accordance with Section 306.15 of the City of Tracy Standard Specifications prior to connection to the existing water distribution system.

The Contractor is responsible to provide temporary water services to all property owners within the construction area and affected by construction activities, or as directed by the Engineer.

Requirements for Sterilization and Connection of New Water Mains:

All newly constructed potable-water mains, services, fire hydrant assemblies, air relief assemblies and fire department connections / back flow preventers must be disinfected and tested for water quality by the Contractor in accordance with AWWA Standard for Disinfecting Water Mains (§C651-05 or the most current). No tablet disinfection must be allowed. Contractor is responsible for de-chlorination and disposal of disinfection and flushing water. Contractor is responsible for all testing required to verify water quality and to receive acceptance by City of new potable water facilities prior to placement in service and connection to existing system. This sterilization, flushing and testing requirement must apply to all new potable water work items and is hereby incorporated into those sections by this reference. Contractor must include cost for all resources required to complete this requirement in the individual bid items.

New water main must remain isolated from existing system throughout the entire construction and sterilization process by means of an approved and tested reduced pressure principle assembly (RPPA) backflow device. Only authorized City of Tracy personnel may operate control valves on existing systems. All water pipe stocked onsite must remain clean and have ends covered until time of installation. Lateral stubs from hot tap saddle & valve less than 20 feet in length may be swabbed with a 1% to 5% dilute chlorine solution prior to installation. Lateral stubs in excess of 20 feet from tapping saddle & valve are considered new water lines and fall under prescribed AWWA C651-05 disinfection procedures. Alternative disinfections procedures require prior authorization from City of Tracy.

City of Tracy must be notified 48-hours prior to Contractor conducting initial and final disinfections and chlorine residual testing. Contractor must utilize a California Department of Health Services certified testing laboratory for all-bacteriological testing. The City must maintain the right to complete its own water quality testing.

MEASUREMENT AND PAYMENT

Payment for furnishing all labor, materials, tools, equipment, and incidentals and for doing all the work involved in modifying the water line system as shown on the plans and specified in these special provisions, and as authorized by the Engineer, is included in the payment for Water Line Modifications. No additional compensation will be allowed.

77-1.04 FURNISH AND INSTALL (N) WATER VALVES, FIRE HYDRANTS, LATERALS, WATER SERVICES AND METERS, AND OTHER WATER SERVICE INSTALLATIONS

General

The Contractor's work will include furnishing and installing water valves, fire hydrants, water laterals, water services and meters, and other water service installations as per the Plans and Specifications. The Contractor will furnish and install the following:

Extend & Cap (E) 1-1/2" WS & Install Meter as per Plans (see Plans, Water Keynote W01), City Standards and Standard Plan 404.

Extend & Cap (N) 2" WS & Install Meter as per Plans (see Plans, Water Keynote W02), City Standards and Standard Plan 404.

Extend & Cap (N) 6" FS (For Future Fire Hydrant) as Per Plans (see Plans, Water Keynote W03), City Standards and Standard Plan 401 (No Hydrant.)

Install (N) Fire Hydrant as per Plans (see Plans, Water Keynote W04), City Standards and Standard Plan 404.

Install (N) Water Meter Onto Existing WS as per Plans (see Plans, Water Keynote W05), City Standards and Standard Plan 404.

Install (N) 6" Valve as per Plans (see Plans, Water Keynote W06), City Standards and Standard Plan 402.

Install (N) 20" Valve as per Plans (see Plans, Water Keynote W06), City Standards and Standard Plan 402.

Install Cut-In Tee as per Plans (see Plans, Water Keynote W07), City Standards and Standard Plan 6.06(E).

Install Thrust Blocks at Water Main Bends &/or Tees as per Plans (see Plans, Water Keynote W08), City Standards and Standard Plan 423.

Replace (E) Water Main Valve Boxes and Adjust to Grade as per Plans (see Plans, Water Keynote W09), City Standards and Standard Plan 402.

Adjust (E) Water Meter & Box to Grade & Behind (E) B/W as per Plans (see Plans, Water Keynote W10) and City Standards.

Install (N) 20" Isolation Water Valve at (E) Water Main as per Plans (see Plans, Water Keynote W11), City Standards and Standard Plan 402.

Install (N) Fire Hydrant as per Plans (see Plans, Water Keynote W12), City Standards and Standard Plan 401.

Off-set & Route 20" Water Main Under (E) Utility as per Plans (see Plans, Water Keynote W13) and City Standards.

Install (N) Air Release Valve as per Plans (see Plans, Water Keynote W14), City Standards and Standard Plan 411.

Adjust (E) WV Box to Grade: Replace Broken or Damaged WV Boxes with (N) as per Plans, Water Keynote W16), City Standards and Standard Plan

Install (N) WS & Meter as per Plans (see Plans, Water Keynote W17), City Standards and Standard Plan 411.

You must determine quantities required to complete work. Submit the quantities as part of the schedule of values. You must submit the schedule of values within 15 days of contract approval.

Provide a schedule of values for each lump sum bid item.

The schedule of values must include type, size, and installation method for:

1. Water lines
2. Water meters
3. Valves, Valve boxes
4. Thrust Blocks
5. Tees, caps, and bends
6. Fire Hydrants
7. Air release valves

MEASUREMENT AND PAYMENT

Payment for furnishing all labor, materials, tools, equipment, and incidentals and for doing all the work involved in modifying the water line system as shown on the plans and specified in these special provisions, and as authorized by the Engineer, is included in the payment for Water Line Modifications. No additional compensation will be allowed.

^^

SECTION 77-2 – SEWER SERVICES

77-2.01 GENERAL CONDITIONS

General

All work will be completed as per Plans and City Standards, in proper sequence as per the Phased Construction Schedule Plan, and as authorized or directed by the Engineer.

Phased Construction Schedule Plan

Contractor must prepare a Phased Construction Schedule Plan and get it authorized by the City Engineer prior to commencement of any construction work. The Phased Construction Schedule Plan must include a precise phasing schedule that will be followed for installation and connection of new sewer mains, and other facilities/equipment, and must also include a phased schedule and coordination to disconnect, abandon-in-place or the demolition/removal of identified sections of the sewer mains and other identified facilities/equipment.

The Phased Construction Schedule Plan must also include and emphasize the required coordination with the Engineer, city public works department, other public agencies or utility companies (if required or necessary), the notification process and coordination with affected sewer service customers (consumers), as well as all other requirements as so authorized or directed by the Engineer.

Before the Contractor starts to prepare the Phased Construction Schedule Plan, the Contractor must contact the City Engineer and acquire all project-specific details and other information that will be important and helpful in preparation of the Phased Construction Schedule Plan. This information and data will generally define and outline the critical phasing issues, timetables, necessary coordination steps, and other specific information and data that may be available from any technical reports. However it is the sole responsibility of the Contractor to prepare the actual “final” Phased Construction Schedule Plan, get it reviewed/ authorized by the City Engineer, and implement the plan prior to commencement of any construction.

Maintaining Existing Sewer Service

The Contractor must not shut down or interrupt flow through the existing sewer system unless specifically permitted to do so, in writing, by the City Engineer.

The Contractor must notify the City in writing of any proposed shutdown of any city sewer main or facility, and approximate duration thereof, a minimum of three-(3) days in advance. Include date, time and extent of duration of shutdown in the written notification.

The Contractor must notify all affected consumers, in writing, twenty-four-(24) hours prior to shutdown, including the date, time, reason for shutdown, and extent of duration of the shutdown.

The Contractor must immediately prior to individual service work, notify the consumer(s) again to verify that all sewer use has been stopped.

As a safety precaution, the Contractor should be involved in the Lock-Out Tag-Out (LOTO) procedure, and provide their own set of locks and tags to be placed along with the City's locks and tags when shutting down a utility.

The Contractor must bear all responsibility for any loss or damage arising out the failure of any such consumer to receive notice of proposed shutdown or interruption of service.

The Contractor must restore sewer service as soon as possible and immediately notify the City Engineer of said restoration of service.

Shut Down Notification - Contractor shall coordinate all shut downs with the City's Public Works Maintenance Department, and follow all of their requirements for exercising and shutting off water valves on main lines. The Contractor shall have all materials required for the work at the job site prior to requesting a shut off.

Shut down of water or sewer services shall be done only after the Contractor has coordinated the shutdown with the Engineer and the property owners. When a water main, sewer main, or service lateral is to be shut down, the Contractor shall coordinate with and notify the Engineer in writing, at least seventy-two (72) hours in advance of the shutdown. Except for scheduled shutdowns and in cases of emergency, the Contractor shall notify all customers and effected parties of a shutdown at least forty-eight (48) hours in advance by writing and four (4) hours in advance by person to allow adequate draw time. Once shut down, the Contractor shall proceed with the work in an expedient manner until the water lines or sewer lines are back in service.

77-2.02 SEWER MAINS AND FACILITIES (DISCONNECT, ABANDON-IN-PLACE OR REMOVE AND DISPOSE)

General

The Contractor must disconnect, abandon-in-place, and/or demolish/remove and legally dispose of the specified sanitary sewer (SS) pipe lines, (SS) laterals and stubs, and (SSMH) sanitary sewer manholes as per the Plans and City Standards, and as per Section 300.02 of the City of Tracy Standard Specifications.

Contractor must slurry fill all currently abandoned and existing utilities to be abandoned that are within 1-foot parallel to proposed utilities. Contractor must use "1-sack" slurry mix. Cost for this work must be included in this bid item.

Shut Down Notification - Contractor shall coordinate all shut downs with the City's Public Works Maintenance Department, and follow all of their requirements for exercising and shutting off water valves on main lines. The Contractor shall have all materials required for the work at the job site prior to requesting a shut off.

Shut down of water or sewer services shall be done only after the Contractor has coordinated the shutdown with the Engineer and the property owners. When a water main, sewer main, or service lateral is to be shut down, the Contractor shall coordinate with and notify the Engineer in writing, at least seventy-two (72) hours in advance of the shutdown. Except for scheduled shutdowns and in cases of emergency, the Contractor shall notify all customers and effected parties of a shutdown at least forty-eight (48) hours in advance by writing and four (4) hours in advance by person to allow adequate draw time. Once shut down, the Contractor shall proceed with the work in an expedient manner until the water lines or sewer lines are back in service.

The Contractor's work will include the following:

Abandon-In-Place (E) 6" SS Pipe & Plug Ends as per Plans (see Plans, Sewer Keynote DS01) and City Standards.

Remove (E) SSMH as per Plans (see Plans, Sewer Keynote DS02) and City Standards.

Remove (E) 8" SS line & Found SS Laterals as per Plans (see Plans, Sewer Keynote DS03) and City Standards.

Remove (E) 15" SS line & Found SS Laterals as per Plans (see Plans, Sewer Keynote DS03) and City Standards.

Remove (E) SS Stub & Plug as per Plans (see Plans, Sewer Keynote DS04) and City Standards.

MEASUREMENT AND PAYMENT

Payment for furnishing all labor, materials, tools, equipment, and incidentals and for doing all the work involved in modifying the sewer line system as shown on the plans and specified in these special provisions, and as authorized by the Engineer, is included in the payment for Sewer Line Modifications. No additional compensation will be allowed.

77-2.03 FURNISH AND INSTALL (N) 8" SANITARY SEWER MAINS

General

All sanitary sewer pipe and fittings must be Vitrified Clay Pipe (VCP) conforming to City of Tracy Standard Specifications.

The Contractor must submit to the Engineer for review and approval the following information prior to construction:

- Product data on pipe material, fittings, and accessories to be used in construction.
- Manufacturer's certificate certifying the product meets or exceeds the specified requirements.

The Contractor must store and handle all pipe material per the manufacturer's recommendations. Do not place pipe or pipe materials on private property or in areas obstructing pedestrian or vehicle traffic. Block individual and stockpiled pipe lengths to prevent moving. Limit stacking of pipe, or provide protection, to ensure no vertical load is placed on the pipe during storage. Pipe ovality may be checked by the Engineer and pipe may be rejected by the Engineer if deemed out of round. Contractor must replace such pipe at no additional cost to City.

Prior to project closeout, the Contractor must record actual locations of piping mains, connections, and invert elevations.

Materials

All sanitary sewer pipe and fittings must be Vitrified Clay Pipe (VCP) conforming to the requirements of SSPWC, Section 207-8 "Vitrified Clay Pipe" and Tracy Standard Specifications.

You must determine quantities required to complete work. Submit the quantities as part of the schedule of values. You must submit the schedule of values within 15 days of contract approval.
Provide a schedule of values for each lump sum bid item.
The schedule of values must include type, size, and installation method for:

1. Sewer Pipes
2. Fittings, sweeps, wyes
3. Geotextile fabrics

Construction

The Contractor must construct the pipe trench in accordance with the project Geotechnical Report, and City of Tracy Standard Plan No. 501 with the following exceptions:

Bedding "A" and Bedding "B" must be Class 2 AB or controlled low strength material (CLSM) where Class 2 AB cannot be properly compacted.

Note 1: Unsuitable sub grade material (i.e., where trench bottoms are unstable, disturbed by construction activity, or where excavation occurs) as determined by the Engineer, must be excavated and replaced with clean, natural durable 1½" crushed rock with the following grading.

Foundation Material	
2"	100
1½"	90 – 100
¾"	0 – 30
3/8"	0 – 20
No. 200	0 – 4

The thickness of this foundation material must be to a depth where a firm base can be created, but must not be less than 12" thick. The 1½" crushed rock must be wrapped with a geotextile fabric having a minimum 12" overlap. The geotextile fabric must be a non-woven material consisting of polyester, nylon or polypropylene filaments formed into a stable network and conforming to the properties on the table below. The fabric is to be permeable, inert to commonly encountered chemicals, rot-proof, resistant to ultra-violet light, and not act as a wicking agent.

Geotextile Fabric		
Property	**Test Value**	**ASTM Test Method**
Weight	5.4 oz./yd.^{2} (min)	D5261
Grab tensile strength	150 lb. (min)	D4632
Elongation at break	50% (max)	D4632
Puncture strength	80 lb. (min)	D4833
Burst Strength	300 psi (min)	D3786
Apparent Opening Size	#70 (max)	D4751
Permittivity	1.0 sec $^{-1}$ (min)	D4491
UV Resistance	70% (min)	D4355

The trench must be constructed to allow accurate placement of pipe in the horizontal alignment and to the elevations indicated on the plans. Handle and install the pipe in accordance with manufacturer's recommendations and per the plans. Install pipe to allow for expansion and contraction without stressing pipe or joints. Install pipe to have bearing along entire length of pipe. Flange or bell holes must be excavated out at each pipe joint to ensure uniform pipe barrel support to proper line and grade over the full length of each pipe segment. Contractor must prevent dirt, sand, gravel or other foreign matter from entering the pipe and sockets of the pipe and fittings.

If groundwater is encountered during the trenching operation for the sanitary sewer lines or laterals, contact city of Tracy for remediation in accordance with City of Tracy Design Standards, Section 4.

After the pipe is placed in the trench, pipe embedment material is to be uniformly placed in maximum 8-inch thick loose lifts on each side of the pipe and hand-shovel sliced under the pipe haunches to support the sides of the pipe and prevent pipe displacement and compact according to the plans. Backfilling of the trench must not commence until after the pipe bedding has been tested and approved. Trench backfill material is to be placed in maximum loose lifts of 8 inches above the pipe embedment material and compacted according to the plans. Jetting of trench or pit backfill is not allowed. Maintain optimum

moisture content of bedding material to attain the relative compaction required on the plans. Relative compaction as referenced herein is in accordance with ASTM D1557. It is the Contractor's responsibility to protect the pipeline from damage at all times, including during the placement and compaction of surrounding and overlying backfill materials. The City will perform in place compaction tests every 100 feet in paved areas, every 250 feet in unimproved areas and for each 2 vertical feet of backfill depth for both paved and unimproved areas. In place compaction tests must be in accordance with the following:

Density Tests: ASTM D6938 – 08a.

Moisture Tests: ASTM D2216 or ASTM D3017.

The Contractor must place a bright colored, plastic ribbon, non-detectable, warning tape above the sewer pipe. The warning tape must be a minimum of 6 inches wide and 4 mil thick, continuously printed with the words "Caution Buried Sewer Line Below" (or approved substitute) and placed no more than 24-inches below the finished grade.

The Contractor must test sanitary sewer lines in conformance with Section 306.16 of the City of Tracy Standard Specifications prior to connection to the existing sanitary sewer system. At the City's discretion, the Contractor must inspect the sanitary sewer lines with a closed-circuit television (CCTV) camera in accordance with Section 306.17 of the City of Tracy Standards Specifications. Contractor must slurry fill all currently abandoned and existing utilities to be abandoned that are within 1-foot parallel to proposed utilities. Contractor must use "1-sack" slurry mix. Cost for this work must be included in this bid item.

Shut Down Notification - Contractor shall coordinate all shut downs with the City's Public Works Maintenance Department, and follow all of their requirements for exercising and shutting off water valves on main lines. The Contractor shall have all materials required for the work at the job site prior to requesting a shut off.

Shut down of water or sewer services shall be done only after the Contractor has coordinated the shutdown with the Engineer and the property owners. When a water main, sewer main, or service lateral is to be shut down, the Contractor shall coordinate with and notify the Engineer in writing, at least seventy-two (72) hours in advance of the shutdown. Except for scheduled shutdowns and in cases of emergency, the Contractor shall notify all customers and effected parties of a shutdown at least forty-eight (48) hours in advance by writing and four (4) hours in advance by person to allow adequate draw time. Once shut down, the Contractor shall proceed with the work in an expedient manner until the water lines or sewer lines are back in service.

MEASUREMENT AND PAYMENT

Payment for furnishing all labor, materials, tools, equipment, and incidentals and for doing all the work involved in modifying the sewer line system as shown on the plans and specified in these special provisions, and as authorized by the Engineer, is included in the payment for Sewer Line Modifications. No additional compensation will be allowed.

77-2.04 INSTALL (N) SANITARY SEWER MANHOLES, LATERALS AND CLEAN-OUTS

General

The Contractor's work will include installing the following as per the Plans and Specifications:

Extend and Cap (E) Sewer Lateral & Install SS Clean-out as per Plans (see Plans, Sewer Keynote S01), City Standards and as per Standard Plan 203.

Install & Cap (N) 8" SS Lateral from (E) SSMH as per Plans (see Plans, Sewer Keynote S02) and City Standards. Pipe slope must be 0.02 (minimum.)

Install 60" SSMH as per Plans (see Plans, Sewer Keynote S03), City Standards and as per Standard Plan 301.

Adjust Found SS Clean-outs to Grade (as required) as per Plans (see Plans, Sewer Keynote S04) and City Standards. (E) 6" SS service is to remain in place.

Install 60" Drop SSMH as per Plans (see Plans, Sewer Keynote S05), City Standards and as per Standard Plan 206A.

Install 6" SS Service with SSCO as per Plans (see Plans, Sewer Keynote S07), City Standards and Standard Plan.

You must determine quantities required to complete work. Submit the quantities as part of the schedule of values. You must submit the schedule of values within 15 days of contract approval.
Provide a schedule of values for each lump sum bid item.
The schedule of values must include type, size, and installation method for:

1. Sewer Pipes
2. Fittings
3. Cleanouts
4. Manholes

MEASUREMENT AND PAYMENT

Payment for furnishing all labor, materials, tools, equipment, and incidentals and for doing all the work involved in modifying the sewer line system as shown on the plans and specified in these special provisions, and as authorized by the Engineer, is included in the payment for Sewer Line Modifications. No additional compensation will be allowed.

STANDARD PLAN LIST

SECTION 43 – CITY STANDARD PLANS

The City of Tracy Engineering Design & Construction Standards (December 2008), including amendments thereto are by reference a part of the specifications for this project, and all materials and construction must be in strict conformance with these except as modified herein. It is the Contractors responsibility to thoroughly review and understand all of the requirements stated and referenced. The following City Standard Plans are representative of those specifically referenced in these technical specifications and are provided for convenience to the Contractor. The Contractor is responsible to maintain and have available for reference by field and office personnel a complete set of all project specific and referenced plans and specifications.

203 - Sewer Lateral
206A - Inside Drop Manhole
301 - Manhole
401 - Fire Hydrant
402 - Valve, Box & Riser
404 - 1-1/2" & 2" Water Service
411 - Combination Air & Vacuum Release Valve Assembly & Blowoff
423 - Thrust Block
501 - Trenching & Resurfacing (3 sheets)
560 - Utility Locations

THIS PAGE INTENTIONALLY LEFT BLANK

^^^

1. Design calculations.
2. Assembly plans
3. Member and connection details

Add to section 83-2.01:

The concrete at Concrete Barrier Type (Type 732 Modified), Concrete Barrier Type (Type 732B Modified), and Concrete Barrier (Pedestrian) must be integrally pigmented colored concrete as shown. Comply with Section 51.

Replace section 83-2.02E(5) with:

83-2.02E(5) Type QUADGUARD II Crash Cushion

Type QUADGUARD II Crash Cushion crash cushion must be installed where shown on the plans and in conformance with the provisions in the standard specifications and these special provisions.

Crash Cushion must be a size QG210024 as manufactured by Energy Absorption Systems, Inc., and must include the items detailed on the manufacturer plans and installation instructions.

The Crash Cushion is approved by the National Cooperative Highway Research Program (NCHRP) Report 350 Test Level 3 (TL-3.)

The successful bidder can obtain the crash cushion from Energy Absorption Systems Inc., 70 West Madison Street Suite 2350, Chicago, IL 60602, telephone (312) 467-6750. Quadguard II crash cushion may be obtained from the distributor, National Trench Safety LLC, 7849 Stockton Boulevard, Sacramento, CA 95823, telephone (916) 387-6300.

The price quoted by the manufacturer for the crash cushion Quadguard II, (TL-3), FOB Sacramento, CA is $19,725, including shipping and sales tax.

The price quoted for QUADGUARD II crash cushion includes the concrete anchorage devices, but does not include the concrete foundation slab, additional transition panels or transitions assemblies that may be required.

The normal availability of this crash cushion is approximately 21 business days from the date of the purchase order. Pricing is good through December 31, 2014 while the estimated freight ($1,350) is subject to change.

Submit a copy of the manufacturer's plan and parts list as an informational submittal. Submit a certificate of compliance for Type Quadguard II QG210024 crash cushion.

The contractor must provide the Engineer with a copy of the manufacturer's installation manual. Install the crash cushion under the manufacturer's installation instructions.

Concrete anchorage devices used for attaching the crash cushion to the foundation slab must be limited to those provided by the manufacturer.

Concrete anchor slab when required must comply with sections 51 and 52, except the compressive strength must be 4,000 psi at 28 days.

Roadway excavation if required must comply with section 19.

After installing the Type Quadguard II crash cushion, dispose of surplus excavated material in a uniform manner along the adjacent roadway where designated by the Engineer.

Add to section 83-2.03:

Payment for colored concrete for pilasters and barriers are included in the payment for the various types of concrete barriers.

Exterior pilasters are paid for as Concrete Barrier (Pedestrian).

Add section 83-3 Removable Railing:

83-3.01 GENERAL

Section 83-3 includes specifications for furnishing and installing removable railing. Removable railing includes steel pipe sleeve, aluminum tubing, steel plates, and locks with keys at each pipe sleeve location.

83-3.02 MATERIALS

Galvanized steel pipe must conform to the Section 75 of the standard specifications.

Aluminum tubing must be aluminum alloy 6061-T6

Aluminum tubing must be welded together as shown. Weld with the inert gas-shielded welding process using E4043 aluminum electrode filler wires. The filler width must be equal to the wall thickness of the smallest welded tubing.

83-3.03 CONSTRUCTION

Not Used

83-3.04 PAYMENT

Not Used

Add section 83-4 Collapsible Bollard:

83-4.01 GENERAL

Section 83-4 includes specifications for furnishing and installing collapsible bollard.

Bollard must be by Dumor, model 400-36 S-1SL. Collapsible bollard includes steel pipe sleeve, steel pipe, steel plates, powder coating, concrete footing, and aggregate base.

83-4.02 MATERIALS

Not used

83-4.03 CONSTRUCTION

Not Used

83-4.04 PAYMENT

Not Used

^^

86 ELECTRICAL SYSTEMS

Add to the end of the 1st paragraph of the RSS for section 86-1.01:

This work is shown on plan sheets labeled E. The work involved in each bid item is shown on a sheet with a title matching the bid item description.

All equipment and materials that the CONTRACTOR proposes to install shall conform to these specifications and the contract plans. A list of substitute equipment and/or materials, along with a written descriptive summary, describing the functions of the components that the CONTRACTOR proposes to install shall be submitted along with his bid proposal. The list shall be complete as to the name of the manufacturer, size and identifying number of each item. The list shall be supplemented by such other data as may be required.

Lighting equipment is included in the following structures:
1. 11th Street East Tracy Overhead

Communication conduit is included in the following structures:
1. 11th Street East Tracy Overhead

Add to the list in the 5th paragraph of the RSS for section 86-1.03:

14. Emergency Vehicle Detection System
15. CCTV/PTZ Camera
16. Actelis Ethernet Switch
17. Service Enclosure and Battery Backup System

Replace the 3rd paragraph of section 86-1.06A with:

Traffic signal system shutdowns are limited to periods between the hours of 9:00 a.m. and 3:00 p.m.

Add to section 86-2.04A:

The sign mounting must be in accordance with City of Tracy Standard Plans 151B and 151C.

The sign panels will be Contractor furnished.

Add to section 86-2.05A:

Conduit installed underground must be Type 3.

Add to section 86-2.05B:

The conduit in a foundation and between a foundation and the nearest pull box must be Type 1.

Add to section 86-2.05C:

If Type 3 conduit is placed in a trench, not in the pavement or under concrete sidewalk, after the bedding material is placed and the conduit is installed, backfill the trench to not less than 4 inches above the conduit with minor concrete under section 90-2, except the concrete must contain not less than 421 pounds of cementitious material per cubic yard. Backfill the remaining trench to finished grade with backfill material.

After conductors have been installed, the ends of the conduits terminating in pull boxes, service equipment enclosures, and controller cabinets must be sealed with an authorized type of sealing compound.

At those locations where conduit is required to be installed under pavement and underground facilities designated as high priority subsurface installation under Govt Code § 4216 et seq. exist, conduit must be placed by the trenching in pavement method under section 86-2.05C.

At other locations where conduit is required to be installed under pavement and if a delay to vehicles will not exceed 5 minutes, conduit may be installed by the trenching in pavement method.

The final 2 feet of conduit entering a pull box in a reinforced concrete structure may be Type 4.

Replace the 3rd paragraph in section 86-2.06A(2) of the RSS for section 86-2.06 with:

In a ground or sidewalk area, embed the bottom of a pull box in crushed rock.

Replace "Reserved" in section 86-2.06B of the RSS for section 86-2.06 with:

86-2.06B(1) General

86-2.06B(1)(a) Summary

Section 86-2.06B includes specifications for installing non-traffic-rated pull boxes.

86-2.06B(1)(b) Submittals

Before shipping pull boxes to the job site, submit a list of materials used to fabricate the pull boxes to the engineer. Include:

1. Contract number
2. Manufacturer's name
3. Manufacturer's installation instructions
4. Your contact information

Submit reports for pull boxes from an NRTL-accredited laboratory.
Before installing a pull box and cover, submit the manufacturer's replacement warranty for them.

86-2.06B(1)(c) Quality Control and Assurance

86-2.06B(1)(c)(i) Functional Testing

The pull box and cover must be tested under ANSI/SCTE 77, "Specification for Underground Enclosure Integrity."

86-2.06B(1)(c)(ii) Warranty

Provide a 2-year manufacturer's replacement warranty for the pull box and cover. The warranty period starts on the date of Contract acceptance.

86-2.06B(2) Materials

The pull box and cover must comply with ANSI/SCTE 77, "Specification for Underground Enclosure Integrity," for tier 22 load rating and must be gray or brown.

A pull box extension must be made of the same material as the pull box and attached to the box to maintain the minimum combined depths.

Include recesses for a hanger if a transformer or other device must be placed in a pull box.

The bolts, nuts, and washers must be a captive design.

The captive bolt must be capable of withstanding a torque from 55 to 60 ft-lb and a minimum pull-out strength of 750 lb. Perform the test with the cover in place and the bolts torqued. The pull box and cover must not be damaged while performing the test.

Hardware must be stainless steel with 18 percent chromium and 8 percent nickel content.

Galvanize ferrous metal parts under section 75-1.05.

The manufacturer's instructions must include:

1. Quantity and size of entries that can be made without degrading the strength of the pull box below the tier 22 load rating
2. Locations where side entries cannot be made
3. Acceptable method for creating the entry

The tier 22 load rating must be labeled or stenciled by the manufacturer on the inside and outside of the pull box and on the underside of the cover.

86-2.06B(3) Construction

Do not install a pull box in curb ramps or driveways.

A pull box for a post or a pole standard must be located within 5 feet of the standard. Place the pull box adjacent to the back of the curb or edge of the shoulder. If this is impractical, place the pull box in a suitable, protected, and accessible location.

Add to section 86-2.08A:

Wrap conductors around the projecting end of conduit in pull boxes as shown. Secure conductors and cables to the projecting end of the conduit in pull boxes.

Replace the 1st sentence of the 1st paragraph of section 86-2.08E with:

Signal interconnect cable must be the 12 pair type with stranded tinned copper no. 20 conductors.

Each pair shall be wrapped with an aluminum polyester shield and shall have a No. 22 or larger, stranded, tinned copper drain wire inside the shield pair.

The Contractor shall furnish and supply one EDCO Surge Arrestor to terminate the SIC to the terminal block. The SIC shall be grounded on each end of the controller cabinet. Unused SIC pairs shall be grounded.

The contractor shall terminate the interconnect cable on the terminal block in each Controller Cabinet. Termination of the interconnect cable shall be in accordance with the instructions from the manufacturer producing the Type 2070 software.

Testing of interconnect cable shall be done on each individual wire. Insulation resistance value shall not be less than 100 mega ohms. Contractor, in the presence of the Engineer, will do testing before connecting to the terminal block.

All interconnect cable shall be installed in one piece, no splices, between controller cabinets. Each cable shall be marked as to destination and direction in each pull box and controller cabinet

Add to section 86-2.11A:

Continuous welding of exterior seams in service equipment enclosures is not required.

Circuit breakers must be the cable-in/cable-out type mounted on non-energized clips. All circuit breakers must be mounted vertically with the up position of the handle being the "ON" position.

Each service must be provided with up to 2 main circuit breakers that will disconnect ungrounded service entrance conductors. Where the "Main" circuit breaker consists of 2 circuit breakers as described, each of the circuit breakers must have a minimum interrupting capacity of 10,000 A, rms.

TRAFFIC SIGNAL SERVICE EQUIPMENT AND BATTERY BACKUP SYSTEM

The Contractor must furnish and install a combination metered service equipment enclosure and battery backup system (BBS). The Service/BBS combination must be a Tesco Model 27-22 Metered Service Pedestal and Back-to-Back BBS System.

The BBS system shall provide a minimum run time for a full traffic signal for 2 hours. Additionally the BBS shall provide 6 to 8 hours of red flash.

Replace "Reserved" in section 86-2.11B with:

Electric service (irrigation) must be from the service points to the irrigation controllers (IC) and to the spaces provided in the irrigation controller enclosure cabinets (CEC) for irrigation controllers as shown. Service disconnects in service equipment enclosures must be 1-pole, 15-A circuit breaker.

The inscription on the other nameplates must be the letter designation used on the plans and in these special provisions.

Conductors, conduit, and pull boxes to the pull box adjacent to irrigation controller enclosure cabinets and irrigation controllers are included in the payment for electric service (irrigation).

Replace section 86-2.18 with:

86-2.18 NUMBERING ELECTRICAL EQUIPMENT

Replace 1st paragraph of section 86-2.18 with:

Place numbers on the equipment as ordered.

Replace section 86-3.01B with:

86-3.01B MODEL 2070 CONTROLLER ASSEMBLY

Traffic actuated controller units and auxiliary equipment shall conform to the provisions in Section 86-3, “Controller Assemblies” of the Caltrans Specifications and these Special Provisions.

Model 2070 controller shall meet the current Caltrans Transportation Electrical Equipment Specifications (TEES). All equipment and software installed shall also be compatible with existing City traffic control system. All Model 2070 Controller assemblies shall include and conform to the following specifications for the Model 2070 Controller.

1. The controller shall be provided and installed by the Contractor. The Contractor shall provide Model 2070 controller with McCain 2033-1.306 software (Traffic adaptive) for traffic signals in 332 type cabinet.
2. The Contractor shall furnish and install Actelis Ethernet Switch inside the controller cabinet.
3. All convenience receptacles shall be ground fault interrupter (GFI) type.
4. All labeling shall be either silk screen on metal or phenolic engraved labels.
5. All circuit breakers shall have the rating engraved into the handle.
6. The U1 EPROM socket shall be of the “O” insertion force type, i.e., the EPROM chips shall be installed or removed without the use of tools.
7. Provide a preempt test switch panel in every cabinet for EVA, EVB, EVC, EVD, RR1 and RR2. Switches shall be on-off-momentary type.
8. Provide an 18-inch fluorescent light in the cabinet.
9. All Model 2070 Controller boards shall be of the “vertical mount” type; horizontal mount boards are NOT ACCEPTABLE.
10. Provide for a combined PDA and cabinet power supply into one unit.

11. Provide and install Model 400 modem
12. Provide and install 170 Ethernet Port modem
13. Provide and install Standalone 400 Modem

All Model 2070 components shall be manufactured and furnished by the same manufacturer, and shall form a completed functional controller system capable of providing the traffic signal operation specified, and capable of operating as part of a coordinated system, either under the control of a “master-submaster” , “time base” coordination” or adaptive coordination. Controllers shall be provided with restart switch installed on the inside of the controller unit (not on front panel). Each system memory module shall also provide an on board hardware clock circuit, capable of updating the software clock of the 2070 Controller. Manufacturer shall pre-program the conflict monitor program board for each intersection.

The Contractor shall furnish a “Certificate of Compliance” assuring the City that the traffic signal controller and cabinet comply with these Special Provisions and that they will operate as shown on the Plans.

All equipment and software installed shall also be compatible with existing City traffic control system.

The Contractor shall arrange to have a signal technician, qualified to work on the controller unit and employed by the controller unit manufacturer or his representative, present at the time the equipment is turned on. The Contractor shall deliver a fully operating system.

The CONTRACTOR shall arrange to have a qualified person employed by the software supplier to provide at least sixteen (16) hours of training to the City Staff. The training shall be at a time and location that shall be determined by the Engineer.

Controller Cabinet –

Field wiring terminal strips capable of accepting up to four (4) conductors for each phase.

Model 332-controller cabinet shall include a Model 420 Auxiliary Output file via the C5 connector to enable a total of 13 vehicle/pedestrian/overlap outputs. Model 332-controller cabinet with Model 420 Auxiliary Output file shall be fully wired and tested prior to field installation.

Model 332-controller cabinet shall be constructed from aluminum, and shall be anodized by the manufacturer, and not painted.

Within 14 calendar days of receipt of Contractor's Materials List, the City shall have the right to request a sample of any materials used for the construction of the traffic signal, or the interconnect system; including, but not limited to, controller & controller cabinet, and any other item deemed necessary to be tested or inspected for compliance to the specifications. Contractor shall deliver those materials requested within 21 calendar days of request. If the requested materials are not received by the City within the time specified, those materials requested shall be deemed to be unsatisfactory, and rejected. All traffic control equipment to be furnished shall be currently acceptable to the CALTRANS Laboratory, Sacramento, CA, and shall be currently listed on the Department of Transportation "QPL" list.

The Contractor will be given one "punch list" for the contract. This will include a "compliance recheck" of the punch list. If when the compliance recheck is performed, it is found that the Contractor has not completed the punch list, the cost of subsequent compliance rechecks will be deducted from any monies due or which may become due the Contractor. The traffic signal will not be turned on until the “punch list” items have been completed.

The maintenance and repair agreement period for furnished equipment shall not commence until the controllers, cabinets, and auxiliary equipment have been installed at the project sites, placed in operation by a factory representative, and the project accepted as complete.

Any damage to a new traffic signal facility or to new equipment installed, as part of a modified facility prior to or during the "five-day functional test" shall be repaired by the Contractor at his expense. After successful completion of the five-day test, the City will assume maintenance for the signal. The "five-day functional test" will begin on the day the intersection is turned on, and/or placed in "flashing operation" for

a period of a day or days prior to turning on the signal to full operation. Maintenance by the City will not relieve the Contractor of repairing any deficiency found prior to the acceptance of the contract.

The existing controller cabinet shall be removed and salvaged when no longer needed.

The Contractor shall replace existing sidewalk to the score line for any damaged sidewalk as a result of the installation of the controller cabinet. Sidewalk, curb and gutter damaged by Contractor's operation shall be repaired at Contractor's expense.

Replace section 86-4.01D(1)(c)(ii) with:

86-4.01D(1)(c)(ii) Warranty
The manufacturer must provide a written warranty against defects in materials and workmanship for LED signal modules for a minimum period of 48 months after installation of LED signal modules. All warranty documentation must be submitted to the Engineer before installation.

Add to section 86-4.01D(2)(a):

LED signal module must be manufactured for 12-inch circular, and arrow sections.

Replace section 86-4.03H with:

86-4.03H LED Countdown Pedestrian Signal Face Modules

86-4.03H(1) General

86-4.03H(1)(a) Summary

Section 86-4.03H includes specifications for installing a LED countdown PSF module into a standard Type A pedestrian signal housing. Comply with TEES.

86-4.03H(1)(b) Definitions

Not Used

86-4.03H(1)(c) Submittals

Submit documentation of the manufacturer's production QA, including test data showing the modules comply with the following requirements:

1. Luminous intensity as shown in the table titled "Luminance Values."
2. Power factor after burn-in.
3. Test current flow measurements in amperes after burn-in. The measured values must comply with the design qualification figures. Record the measured ampere values with rated voltage on the product labels.

Submit the manufacturer's warranty before installing LED countdown PSF modules.

86-4.03H(1)(d) Quality Control and Assurance

86-4.03H(1)(d)(i) General

The Engineer rejects a module if a visual inspection reveals any of the following defects:

1. Exterior physical damage
2. Assembly anomalies
3. Scratches
4. Abrasions
5. Cracks
6. Chips
7. Discoloration
8. Other surface defects

86-4.03H(1)(d)(ii) Warranty

Provide a 5-year manufacturer's replacement warranty against defects or failures. The warranty period starts on the date of Contract acceptance.

86-4.03H(2) Materials

A LED countdown PSF module must:

1. Use LED as the light source.
2. Be made of material complying with ASTM D 3935.
3. Be designed to mount behind or to replace face plates of a standard Type A housing as specified in the ITE publication *Equipment and Material Standards,* chapter 3, "Pedestrian Traffic Control Signal Indications," and the *California MUTCD*.
4. Have a minimum power consumption of 10 W for the "Upraised Hand."
5. Have internal components supported such that they withstand mechanical shock and vibration from high winds and other sources.
6. Use the required color and be the ultra-bright type rated for 100,000 hours of continuous operation for a temperature range from -40 to +74 degrees C.
7. Have replaceable signal lamp optical units.
8. Fit into the housing of a pedestrian signal section without modification.
9. Be a single, self-contained device that does not require on-site assembly for installation.
10. Have the following information permanently marked on the back of the module:
    - 10.1. Manufacturer's name
    - 10.2. Trademark
    - 10.3. Model number
    - 10.4. Serial number
    - 10.5. Lot number
    - 10.6. Month and year of manufacture
    - 10.7. Required operating characteristics, including:
        - 10.7.1. Rated voltage
        - 10.7.2. Power consumption
        - 10.7.3. Volt-ampere
        - 10.7.4. Power factor
11. Have prominent and permanent vertical markings for accurate indexing and orientation within the signal housing if a specific mounting orientation is required. Markings must be a minimum of 1 inch in height and include an up arrow and the word "up" or "top."

The circuit board and the power supply must be contained inside of the LED countdown PSF module. The circuit board must comply with TEES, chapter 1, section 6.

The enclosure containing the power supply or the electronic components of the module, except the lens, must be made of UL 94 V-0 flame-retardant material.

Each symbol must be at least 9 inches high and 5-1/4 inches wide. The lens' signal output for the "Walking Person" and "Upraised Hand" symbols and the countdown display must not exceed a ratio of 5 to 1 for the highest and lowest luminance values. The symbols must comply with ITE publication *Equipment and Material Standards,* chapter 3, "Pedestrian Traffic Control Signal Indications," and the *California MUTCD*. The 2-digit countdown timer, "Upraised Hand," and "Walking Person" indications must be electronically isolated from each other. The 3 indications must not share a power supply or interconnect circuitry.

The module must maintain an average luminance value for at least 5 years of continuous signal operation for a temperature range from -40 to +74 degrees C.

The module must operate over the specified ambient temperature and voltage range and be readable both day and night at distances up to the full width of the area to be crossed. Upon initial testing at 25 degrees C, the module must have at least the luminance values shown in the following table:

Luminance Values

PSF module symbol	Luminance
"Upraised Hand" and 2-digit countdown timer	1,094 fL
"Walking Person"	1,547 fL

The color output of the module must comply with chromaticity requirements in section 5.3 of ITE publication *Equipment and Material Standards* chapter 3, "Pedestrian Traffic Control Signal Indications."

When operating over a temperature range from -40 to +74 degrees C, the measured chromaticity coordinates of the module must comply with the following requirements for 5 years after Contract acceptance:

Chromaticity Standards (CIE Chart)

"Upraised Hand" and 2-digit countdown timer (portland orange)	0.600 ≤ X ≤ 0.659 Y: Not greater than 0.390 or less than 0.331 or less than 0.990 - X
"Walking Person" (lunar white)	X: Not less than 0.280 or greater than 0.400 Y: Not less than 0.0483 + 0.7917*X or greater than 0.0983 + 0.7917*X

The module must not exceed the power consumption requirements shown in the following table:

Maximum Power Consumption Requirements

PSF module display	At 24 ºC	At 74 ºC
"Upraised Hand"	10.0 W	12.0 W
"Walking Person"	9.0 W	12.0 W
2-digit countdown timer	6.0 W	8.0 W

The wiring and terminal block must comply with section 13.02 of ITE publication *Equipment and Material Standards*, chapter 2, "Vehicle Traffic Control Signal Heads." The PSF module must have spade lugs and 3 secured, jacketed copper wires that comply with NEC and are:

1. Color coded
2. 3 feet long
3. 600 V(ac)
4. 20 AWG minimum stranded
5. Rated for service at +105 degrees C

The module must operate:

1. At a frequency of 60 ± 3 Hz over a voltage range from 95 to 135 V(ac) without flicker perceptible to the unaided eye. Fluctuations of the line voltage must have no visible effect on the luminous intensity of the indications. The rated voltage for measurements must be 120 V(ac).
2. With currently-used Department controller assemblies, including solid-state load switches, flashers, and conflict monitors. Comply with TEES, chapters 3 and 6. If an alternating current of 20 mA or less is applied to the unit, the voltage read across the 2 leads must not exceed 15 V(ac).
3. With a smart control and regulation mode that exhibits countdown displays automatically adjusted to the traffic controller's programmed intervals.

The countdown PSF module must operate during the pedestrian change interval. The module must begin counting down when the flashing "Upraised Hand" interval turns on, counting down to 0 and turning off when the steady "Upraised Hand" interval turns on.

The module's on-board circuitry must:

1. Include voltage surge protection to withstand high-repetition noise transients. The voltage surge protection must comply with NEMA Standard TS, section 2.1.6.
2. Comply with Class A emission limits for electronic noise under 47 CFR 15, subpart B.

The module must provide a power factor of 0.90 or greater.

The total harmonic distortion from a current and voltage induced in an alternating-current power line by a PSF module must not exceed 20 percent at an operating temperature of 25 degrees C.

The module's circuitry must prevent light emission perceptible to the unaided eye when a voltage of 50 V(ac) or less is applied to the unit.

When power is applied to the module, light emission must occur within 90 ms.

86-4.03H(3) Construction

Use LED countdown PSF modules from the same manufacturer.

Install the module in a standard Type A pedestrian signal housing. Special tools must not be required for installing the modules.

The installation of the module into the pedestrian signal face must require only the removal of the lens, reflector, and existing LED module.

86-4.03H(4) Payment

Not Used

Add to section 86-5.01A(1):

Loop wire must be Type 2.

Loop detector lead-in cable must be Type B.

In the presence of the Engineer, the Contractor shall test the detectors with a motor-driven cycle, as defined in the California Vehicle Code that is licensed for street use by the Department of Motor Vehicles of the State of California. The unladen weight of the vehicle shall not exceed 220 pounds and the engine displacement shall not exceed 100 cubic centimeters. Special features, components or vehicles designed to activate the detector will not be permitted. The Contractor shall provide an operator who shall drive the vehicle through the detection area of the detector loops at not less than 3 miles per hour nor more than 7 miles per hour. The detector shall provide an indication in response to this test.

Any detector loops, detector cable or detector module found to be defective or damaged shall be replaced and retested. The cost of retesting and replacement of defective loops shall be borne by the Contractor and no additional compensation shall be allowed.

The depth of the loop sealant above the top of the uppermost loop wire in the sawed slots must be 2 inches, minimum.

Replace "Reserved" in section 86-5.01D with:

86-5.01D(1) General

Each traffic signal must have an emergency vehicle detector system that must comply with the details shown and the special provisions.

Each emergency vehicle detector system must consist of an optical emitter assembly or assemblies located on the appropriate vehicle and an optical detector/discriminator assembly or assemblies located at the traffic signal.

Emitter assemblies are not required for this project except units for testing purposes to demonstrate that the systems perform as specified. Tests must be conducted in the presence of the Engineer as described below under "System Operation" during the signal test period. The Engineer must be provided a minimum of 2 working days' notice prior to performing the tests.

Each system must allow detection of 2 classes of authorized vehicles. Class I (mass transit) vehicles must be detected at ranges of up to 1,000 feet from the optical detector. Class II (emergency) vehicles must be detected at ranges up to 1,800 feet from the optical detector.

Class I signals (those emitted by Class I vehicles) must be distinguished from Class II signals (those emitted by Class II vehicles) on the basis of the modulation frequency of the light from the respective emitter. The modulation frequency for Class I signal emitters must be 9.639 Hz ± 0.110 Hz. The modulation frequency for Class II signal emitters must be 14.035 Hz ± 0.250 Hz.

A system must establish a priority of Class II vehicle signals over Class I vehicle signals and must comply with the requirements in section 25352 of the California Vehicle Code.

86-5.01D(2) Emitter Assembly

Not Used.

86-5.01D(3) Optical Detection/Discriminator Assembly

86-5.01D(3)(a) General

Each optical detection/discriminator assembly must consist of 1 or more optical detectors, connecting cable and a discriminator module.
Each assembly, when used with standard emitters, must have a range of at least 1,000 feet for Class I signals and 1,800 feet for Class II signals. Standard emitters for both classes of signals must be available from the manufacturer of the system. Range measurements must be taken with all range adjustments on the discriminator module set to "maximum."

86-5.01D(3)(b) Optical Detector

Each optical detector must be a waterproof unit capable of receiving optical energy from 2 separately aim able directions. The horizontal angle between the 2 directions must be variable from 180 degrees to 5 degrees.
The reception angle for each photocell assembly must be a maximum of 8 degrees in all directions about the aiming axis of the assembly. Measurements of reception angle will be taken at a range of 1,000 feet for a Type I emitter and at a range of 1,800 feet for a Type II emitter.

Internal circuitry must be solid state and electrical power must be provided by the associated discriminator module.

Each optical detector must be contained in a housing, which must include 2 rotatable photocell assemblies, an electronic assembly and a base. The base must have an opening to allow mounting on a mast arm or a vertical pipe nipple, or suspension from a span wire. The mounting opening must have female threads for 3/4 inch conduit. A cable entrance must be provided which must have male threads and gasketing to allow a waterproof cable connection. Each detector must have weight of less than 2.5 pounds and must present a maximum wind load area of 36 square inches. The housing must be provided with weep holes to allow drainage of condensed moisture.

Each optical detector must be installed, wired and aimed as specified by the manufacturer.

86-5.01D(3)(c) Cable

Optical detector cable (EV-C) must comply with the requirements of IPCEA-S-61-402/NEMA WC 5, section 7.4, 600-V (ac) control cable, 75 degrees C, Type B, and the following:

1. The cable must contain 3 conductors, each of which must be No. 20 (7 x 28) stranded, tinned copper with low-density polyethylene insulation. Minimum average insulation thickness must be 25 mils. Insulation of individual conductors must be color coded: 1-yellow, 1-blue, 1-orange.

2. The shield must be either tinned copper braid or aluminized polyester film with a nominal 20 percent overlap. Where film is used, a No. 20 (7 x 28) stranded, tinned, bare drain wire must be placed between the insulated conductors and the shield and in contact with the conductive surface of the shield.
3. The jacket must be black polyvinyl chloride with minimum ratings of 600 V (ac) and 80 degrees C and a minimum average thickness of 43 mils. The jacket must be marked as required by IPCEA/NEMA.
4. The finished outside diameter of the cable must not exceed 0.35-inch.
5. The capacitance, as measured between any conductor and the other conductors and the shield, must not exceed 48 pf per foot at 1000 Hz.
6. The cable run between each detector and the controller cabinet must be continuous without splices or must be spliced only as directed by the detector manufacturer.

86-5.01D(3)(d) Discriminator Module

Each discriminator module must be designed to be compatible and usable with a Model 2070 controller unit and to be mounted in the input file of a Model 332L or Model 336L controller cabinet, and must comply with the requirements of chapter I of the State of California, Department of Transportation, "*Traffic Signal Control Equipment Specifications.*"

Each discriminator module must be capable of operating 2 channels, each of which must provide an independent output for each separate input.

Each discriminator module, when used with its associated detectors, must perform the following:

1. Receive Class I signals at a range of up to 1,000 feet and Class II signals at a range of up to 1,800 feet.
2. Decode the signals, on the basis of frequency, at 9.639 Hz ± 0.119 Hz for Class I signals and 14.035 Hz ± 0.255 Hz for Class II signals.
3. Establish the validity of received signals on the basis of frequency and length of time received. A signal must be considered valid only when received for more than 0.50-second. No combination of Class I signals must be recognized as a Class II signal regardless of the number of signals being received, up to a maximum of 10 signals. Once a valid signal has been recognized, the effect must be held by the module in the event of temporary loss of the signal for a period adjustable from 4.5 seconds to 11 seconds in at least 2 steps at 5 seconds ± 0.5 second and 10 seconds ± 0.5 second.
4. Provide an output for each channel that will result in a "low" or grounded condition of the appropriate input of a Model 170E controller unit. For Class I signals the output must be a 6.25 Hz ± 0.1 percent, rectangular waveform with a 50 percent duty cycle. For Class II signals the output must be steady.

Each discriminator module must receive electric power from the controller cabinet at either 24 V (dc) or 120 V (ac).

Each channel together with the channel's associated detectors must draw not more than 100 mA at 24 V (dc) or more than 100 mA at 120 V (ac). Electric power, 1 detector input for each channel and 1 output for each channel must terminate at the printed circuit board edge connector pins shown in the following table:

Board Edge Connector Pin Assignment

A	DC ground		
B	+24 V (dc)	P	(NC)
C	(NC)		
D	Detector input, Channel A	R	(NC)
E	+24V (dc) to detectors	S	(NC)
F	Channel A output (C)	T	(NC)
		U	(NC)
H	Channel A output (E)	V	(NC)
J	Detector input, Channel B	W	Channel B output (C)
K	DC ground to detectors	X	Channel B output (E)
L	Chassis ground	Y	(NC)
M	AC-	Z	(NC)
N	AC+		

(C) Collector, slotted for keying
(E) Emitter, slotted for keying
(NC) Not connected, cannot be used by manufacturer for any purpose.

Two auxiliary inputs for each channel must enter each module through the front panel connector. Pin assignment for the connector must be as follows:

1. Auxiliary detector 1 input, Channel A
2. Auxiliary detector 2 input, Channel A
3. Auxiliary detector 1 input, Channel B
4. Auxiliary detector 2 input, Channel B

Each channel output must be an optically isolated NPN open collector transistor capable of sinking 50 mA at 30 V (ac) and must be compatible with the Model 170E controller unit inputs.

Each discriminator module must be provided with means of preventing transients received by the detector from affecting the Model 170E controller assembly.

Each discriminator module must have a single connector board and must occupy 1 slot width of the input file. The front panel of each module must have a handle to facilitate withdrawal and the following controls and indicators for each channel:

1. Three separate range adjustments each for both Class I and Class II signals.
2. A 3-position, center-off, momentary contact switch, 1 position (down) labeled for test operation of Class I signals, and 1 position (up) labeled for test operation of Class II signals.
3. A "signal" indication and a "call" indication each for Class I and for Class II signals. The "signal" indication denotes that a signal above the threshold level has been received. A "call" indication denotes that a steady, validly coded signal has been received. These 2 indications may be accomplished with a single indication lamp; "signal" being denoted by a flashing indication and "call" with a steady indication.

In addition, the front panel must be provided with a single circular, bayonet-captured, multi-pin connector for 2 auxiliary detector inputs for each channel. Connector must be a mechanical configuration complying with the requirements in *Military Specification MIL-C-26482* with 10-4 insert arrangement, such as Burndy Trim Trio Bantamate Series, consisting of the following:

1. Wall mounting receptacle, G0B10-4PNE with SM20M-1S6 gold plated pins.

2. Plug, G6L10-4SNE with SC20M-1S6 gold plated sockets, cable clamp and strain relief that must provide for a right angle turn within 2-1/2 inches maximum from the front panel surface of the discriminator module.

86-5.01D(3)(e) Cabinet Wiring

The Model 332L cabinet has provisions for connections between the optical detectors, the discriminator module and the Model 170E controller unit.

Wiring for a Model 332L cabinet must comply with the following:

1. Slots 12 and 13 of input file "J" have each been wired to accept a 2-channel module.
2. Field wiring for the primary detectors, except 24-V (dc) power, must terminate on either terminal board TB-9 in the controller cabinet or on the rear of input file "J," depending on cabinet configuration. Where TB-9 is used, position assignments must be as shown in the following table:

Position	Assignment
4	Channel A detector input, 1st module (Slot J-12)
5	Channel B detector input, 1st module (Slot J-12)
7	Channel A detector input, 2nd module (Slot J-13)
8	Channel B detector input, 2nd module (Slot J-13)

The 24-V (dc) cabinet power will be available at Position 1 of terminal board TB-1 in the controller cabinet.

Field wiring for the auxiliary detectors must terminate on terminal board TB-O in the controller cabinet. Position assignments are as shown in the following table:

For module 1 (J-12)		For module 2 (J-13)	
Position	Assignment	Position	Assignment
1	+24V (dc) from (J-12E)	7	+24V (dc) from (J-13E)
2	Detector ground From (J-12K)	8	Detector ground from (J-13K)
3	Channel A auxiliary detector input 1	9	Channel A auxiliary detector input 1
4	Channel A auxiliary detector input 2	10	Channel A auxiliary detector input 2
5	Channel B auxiliary detector input 1	11	Channel B auxiliary detector input 1
6	Channel B auxiliary detector input 2	12	Channel B auxiliary detector input 2

86-5.01D(4) System Operation

The Contractor must demonstrate that the components of each system are compatible and will perform satisfactorily as a system. Satisfactory performance must be determined using the following test procedure during the functional test period:

1. Each system to be used for testing must consist of an optical emitter assembly, an optical detector, an optical detector cable and a discriminator module.
2. The discriminator modules must be installed in the proper input file slot of the Model 170E controller assembly.
3. Two tests must be conducted; 1 using a Class I signal emitter and a distance of 1,000 feet between the emitter and the detector, the other using a Class II signal emitter and a distance of 1,800 feet between the emitter and the detector. Range adjustments on the module must be set to "Maximum" for each test.
4. Each test must be conducted for a period of 1 hour, during which the emitter must be operated for 30 cycles, each consisting of a 1 minute "on" interval and a 1 minute "off" interval. During the total test period the emitter signal must cause the proper response from the Model 170E controller unit during

each "on" interval and there must be no improper operation of either the Model 170E controller unit or the monitor during each "off" interval.

Replace "Reserved" in section 86-5.03 of the RSS with:

86-5.03A General

86-5.03A(1) Summary
Section 86-5.03 includes specifications for installing accessible pedestrian signals (APS). Comply with TEES.

86-5.03A(2) Definitions
accessible pedestrian signal: Accessible pedestrian signal as defined in the *California MUTCD*.

accessible walk indication: Activated audible and vibrotactile action during the walk interval.

ambient sound level: Background sound level in dB at a given location.

ambient sound sensing microphone: Microphone that measures the ambient sound level in dB and automatically adjusts the APS speaker's volume.

APS assembly: Assembly that includes a pushbutton to actuate the APS components.

audible speech walk message: Audible prerecorded message that communicates to pedestrians which street has the walk interval.

programming mechanism: Device to program the APS' operation.

pushbutton information message: Pushbutton information message as defined in the *California MUTCD.*

pushbutton locator tone: Pushbutton locator tone as defined in the *California MUTCD*.
vibrotactile pedestrian device: Vibrotactile pedestrian device as defined in the *California MUTCD*.

86-5.03A(3) Submittals
Before shipping the APS units to the job site, submit the units with the following to METS:

1. Delivery form including Contract number and your contact information
2. Manufacturer's name
3. Model, lot, and serial numbers
4. Month and year of manufacture
5. Wiring diagram
6 Product data
7. Programming mechanism if not integral to the APS

Submit 4 APS user and operator manuals for each signalized location as informational submittals. Each manual must have a master item index that includes:

1. Descriptions of the APS and its associated equipment and cables
2. Illustrative block diagrams
3. Manufacturer's contact information
4. Technical data specifications
5. Parts list, descriptions, and settings
6 Fault diagnostic and repair procedures
7. Preventative maintenance procedures for maintaining APS performance parameters

Submit the manufacturer's warranty documentation as an informational submittal before installing the APS.
Submit a record of completed field tests, the APS' final configuration, audible sound level and threshold, and a list of all parameter settings.

86-5.03A(4) Quality Control and Assurance

86-5.03A(4)(a) General

The APS must be compatible with the Model 2070L controller assembly.
The power to the APS must be connected to the pedestrian signal's terminal blocks.

86-5.03A(4)(b) Functional Testing

Perform 2 field tests on the APS: (1) when traffic is noisy during peak traffic hours and (2) when traffic is quiet during off-peak hours. Notify the Engineer 15 days before testing the APS.

86-5.03A(4)(c) Warranty

The APS must have a 2-year manufacturer's warranty against any defects or failures. The 2-year warranty period starts at Contract acceptance.

86-5.03A(4)(d) Training

Provide a minimum of 4 hours of training by a certified manufacturer's representative for up to 4 Department employees selected by the Engineer. The training must include instruction in installing, programming, adjusting, calibrating, and maintaining the APS.
Furnish materials and equipment for the training.

86-5.03B Materials

The housing for the APS assembly must be made of corrosion-resistant material. Theft proof bolts used for mounting the APS housing to the standard must be stainless steel with a chromium content of 17 percent and a nickel content of 8 percent.
The color of metallic housing must match color no. 33538 of FED-STD-595.

The color of plastic housing must match color no. 17038, 27038, or 37038 of FED-STD-595.

The APS assembly must be rainproof and shockproof in any weather condition.

The APS assembly must include:

1. Pushbutton actuator with a minimum diameter of 2 inches. If a mechanical switch is used, it must have:
   1.1. Operating force of 3.5 lb
   1.2. Maximum pretravel of 5/64 inch
   1.3. Minimum overtravel of 1/32 inch
   1.4. Differential travel from 0.002 to 0.04 inch
2. Vibrotactile device on the pushbutton or on the arrow.
3. Enclosure with an ambient-sound-level-sensing microphone and weatherproof speaker. The enclosure must:
   3.1 Weigh less than 7 lb.
   3.2 Measure less than 16 by 6 by 5 inches.
   3.3 Fit the signal standard.
   3.4 Have a wiring hole with a diameter not exceeding 1-1/8 inches.
   3.5 Be attached to the pole with 2 screws with a diameter from 1/4 to 3/8 inch suitable for use in tapped holes. The clear space between any 2 holes in the post must be at least twice the diameter of the larger hole.
4. Pushbutton sign.

The APS speakers and electronic equipment must be installed inside the APS assembly's enclosure. The speaker grills must be located on the surface of the enclosure.

Speakers must not interfere with the housing or its mounting hardware.

The conductor cable between the APS assembly and the pedestrian signal head must be a no. 9. 20-conductor cable complying with MIL-W-16878D. The wiring must comply with section 13.02 of ITE publication *Equipment and Material Standards* chapter 2, "Vehicle Traffic Control Signal Heads," and be NEC rated for service at +105 degrees C.

The APS must:

1. Include a mechanism for enabling and disabling its operation.
2. Have electronic switches, a potentiometer, or a handheld device for controlling and programming the volume level and messaging. Deliver any handheld programming device to the Engineer.
2 Provide information using:
   2.1 Audible speech message that plays when the pushbutton is actuated. The message must include the name of the street to be crossed. The APS must have at least 5 audible message options. The Engineer selects the message. The message must have a percussive tone consisting of multiple frequencies with a dominant component of 880 Hz. If the tone is selected as the message, it must repeat 8 to 10 ticks per second.
   2.2. Pushbutton locator tone that clicks or beeps. The pushbutton must produce the locator tone at an interval of 1 tone per second. Each tone must have a maximum duration of 0.15 second. The tone volume must adjust in response to the ambient sound level and be audible up to 12 feet from the pushbutton or to the building line, whichever is less.
3. Have a pushbutton that remains functional during an APS failure.

For signalized intersections, the APS must:
1. Have a pushbutton that when actuated activates the pedestrian walk signal's timing during an APS failure.
2 Provide information using:
   2.1. Audible speech walk message. The message must be activated from the beginning of the walk interval and repeated for its duration. An example of the message is "Peachtree. Walk sign is on to cross Peachtree."
   2.2. Pushbutton information message that provides the name of the street to be crossed. The message must play when the pushbutton is actuated. An example of the message is "Wait to cross Howard at Grand. Wait."
3. Have a functional pushbutton that activates the pedestrian walk signal whenever actuated, even if the audible speech walk message, the pushbutton information message, the pushbutton locator tone, and the vibrating surface features are disabled.

86-5.03C Construction

Arrange to have a manufacturer's representative at the job site when the APS is installed, modified, connected, or reconnected. The APS must not interfere with the Department-furnished controller assembly, the signal installation on signal standards, the pedestrian signal heads, or the terminal compartment blocks. The APS electronic control equipment must reside inside the APS assembly and the standard pedestrian signal head.

You are responsible for the compatibility of the components and for making the necessary calibration adjustments to deliver the performance specified. Furnish the equipment and hardware, and then set up, calibrate, and verify the performance of the APS.

Point arrows on the pushbutton signs in the same direction as the corresponding crosswalk. Attach the sign to the APS assembly.

Upon successful installation of the APS, disable the APS function if it is not required immediately.

Do not install an APS on a standard smaller than Type 1.

86-5.03D Payment

Not Used

Add to Section 86-5:

86-5.04 Closed Circuit Television Camera with Pan/Tilt/Zoom Control

The pan-tilt-zoom cameras shall be the Axis Q 6034 E network dome camera for outdoor application manufactured by Axis Communications, or approved equivalent in all aspects and features. The Contractor is responsible for all of the programming of the CCTV camera equipment including all network interfaces and connections.

General

The dome camera shall be based around a solid-state microprocessor, operating on a non-Windows based platform and include a built-in web server providing the user with full remote control of the cameras pan, tilt and zoom functionality.

The dome camera shall utilize a high quality 1/4" CCD with backlight compensation, electronic shutter and a removable IR-Cut filter providing automatic day/night functionality with images down to 0.005 lux @ F1.4 (30 IRE) in B/W mode and 0.3 lux at 30IRE in color mode. It shall also include a built-in motorized zoom lens of at least 18x optical zoom and 12x digital zoom. The dome camera shall provide continues 360º pan support and provide user with at least 20 presets.

The dome camera shall deliver full frame rate (30fps NTSC / 25fps PAL) high quality video in at least 5 different resolutions up to 768x576 (PAL) / 704x480 (NTSC) pixels over IP networks by using ISMA-compliant MPEG4 compression. The dome camera shall support both IP address filtering and HTTPS to secure video and configuration data. It shall not require any dedicated software to operate, beside tools available in a Microsoft W2K/XP operating environment.

The dome camera shall be equipped with at least 4 alarm inputs and 4 outputs, and shall be capable of receiving triggers from third party devices to initiate alarms and/or image transmission, and offer e-mail (SMTP) capabilities as well as file upload (FTP) functionality in response to these triggers. The dome camera shall connect to the network via a RJ-45 with built in auto sensing and switching 10/100 Mbit/s Ethernet interface.

Functionality

The operator shall be able to remotely control the built-in variable speed pan/tilt functionality as well as the zoom lens, which shall incorporate at least 18x optical + 12x digital zoom and provide images of up to 48 degree horizontal angle.

Video shall be available in at least fifteen (15) different resolutions, each supporting a minimum of eleven (11) different compression levels. Supported video resolutions shall include:

160x120

320x240

640x480 (VGA)

The dome camera shall allow the transmission of images at up to 30 frames per second, using ISMA-compliant MPEG-4 format, and with no modification or alteration of the images.

The dome camera shall provide Advanced Simple Profile (ASP) and Simple Profile (SP) MPEG- 4, and shall support both unicast and multicast over RTP, controlled by RTSP. It shall also be possible to tunnel the MPEG-4 unicast stream over RTSP and HTTP. It shall be configured to provide ISMA-compliant MPEG-4. The camera shall provide support for simultaneous Motion JPEG and MPEG-4 streams.

The dome camera shall be capable of providing video at bit rates of up to 8Mbit/sec per video stream.

The dome camera shall contain a built-in web server to make video and configuration available in a standard browser environment, with no need for additional software. When accessed from a browser, the built-in web server shall provide users with online, context-sensitive help.

The dome camera shall support both fixed IP addresses and dynamically assigned IP addresses (provided by a DHCP server). It shall also allow automatic detection of the camera based on

The dome camera shall provide the ability to control network traffic by limiting the maximum bandwidth to a selected value. Furthermore, it shall be possible to limit the frame rate per viewer to a selected value, as well as the duration of each viewing session.

The dome camera shall provide the ability to send operational and technical information using a standard SMTP mail server.

The dome camera shall provide embedded on-screen text in the video, with support for date and time, and a customer-specific text, camera name, of at least 32 ASCII characters. It shall also allow for the overlay of a graphical image, such as a logotype, into the video.

The dome camera shall provide local time and date, including support for daylight saving time. To ensure accuracy, the camera must accept external time synchronization from an NTP (Network Time Protocol) server.

The dome camera shall support simultaneous viewing by up to 20 clients. To avoid improper use and configuration, the camera must provide support for defining users and passwords, for a minimum of three different types of users.

To avoid conflicts, the dome camera shall provide queue functionality for operators requesting pan/tilt/zoom-related control, which shall include duration of control as well as the number of operators in queue.

The dome camera shall support the use of HTTPS and the ability to upload signed certificates to provide an encrypted and secure communication of both administration and video streams. It shall also allow restriction of users to pre-defined IP addresses only, so called IP filtering.

To improve functionality, the dome camera shall allow the user to write scripts, controlling events and other user functions.

LED's shall indicate the dome camera's operational status and provide information about power, communication with receiver, the network status and the camera status.

Customer-specific settings, including the IP address, the local time and date, event functionality and video configuration, shall be stored in a non-volatile memory and shall not be lost during power cuts or soft resets.

Hardware

The dome camera shall be based around an ETRAX 100LX - 32-bit RISC processor and shall be using an ARTPEC-2 compression chip. A minimum of 8MB Flash memory and 32MB RAM memory shall be installed. This memory shall provide ability to, depending of settings, define up to 9MB for pre & post alarm recordings. The dome camera shall have a data throughput of at least 20Mbit/second on the network port.

The dome camera shall be a digital 24-bit DSP dome camera and use 1/4" Sony EXview HAD interlaced CCD. It shall incorporate an 18x optical zoom lens, Automatic Gain Control (AGC), Automatic and Manual White Balance, Backlight compensation and an electronic shutter operating between 1/50 (PAL) or 1/60 (NTSC) and 1/10.000. The dome shall be equipped with a removable IR-cut filter providing so-called day/night functionality. It shall operate at light levels down to 0.3 lux @ F1.4 (30 IRE) in color mode and down to 0.005 lux @ F1.4 (30 IRE) in B/W mode.

The dome camera shall be equipped with a minimum of 4 control (alarm) inputs and 4 outputs, accessible via screw terminal, mating connector shall be supplied with the camera. Inputs shall be configurable to respond to normally open (NO) or normally closed (NC) dry contacts, or to either active low or active high

TTL/CMOS compatible electronic outputs. This functionality, including the default state, shall be programmable through the web interface.

The dome camera shall be connected to a network using 10baseT Ethernet or 100baseTX Fast Ethernet via a standard RJ-45 socket and shall support auto-sensing of speed.

The dome camera shall be manufactured in a solid all-metal casing and be equipped with suitable installation material including ceiling brackets in metal.

The dome camera shall be able to provide continuous 360º operation in pan-mode, and shall operate with a speed of up to 360º/sec.

Power shall be provided through screw terminals and the dome camera shall operate with 24 VAC/ 24VA without a heater or blower, or with 120 VAC with a heater and blower.

Software

The dome camera shall be operating using an embedded non PC-based solution operating on LINUX and shall incorporate TCP/IP, HTTP, HTTPS, FTP, SMTP, NTP, ARP, DCHP, BOOTP protocol support.

The dome camera shall be monitored by a Watchdog functionality, which shall automatically reinitiate processes or restart the dome camera if any miss-functional behavior is detected.

Software (firmware) updates shall be possible through the network, using FTP or HTTP.

The dome camera shall incorporate support for Shell scripting to allow customer specific functions to be created.

The dome camera shall support full functionality when operating in the following environment; Operating Systems: MS Windows 98, Windows ME, Windows NT4, Windows 2000, Windows XP Browsers: MS Explorer 5.x and higher

A fully open and published API (Application Programmers Interface) shall support the dome camera, providing all necessary information needed to integrate functionality into third party applications.

Environmental

The dome camera shall operate successfully in a temperature range from 5 to 50 degrees C (41 to 122 degrees F), and in a humidity range of 20–80% RHG.

Approvals and standards

The unit shall carry the following approvals:

EMC:

- CE Compliant according to: EN55024:1998 + A1 +A2, EN55022:1998 + A1 Class B, EN61000-3 2:2000, EN61000-3-3:1995 + A1
- FCC Part 15 subpart B Class B, by compliance with EN55022:1998 Class B
- VCCI:2003 Class B ITE
- C-tick AS/NZS 3548
- Canadian ICES-003 B, by compliance with EN55022:1998 Class B

Safety:

- EN60950

The unit shall be designed in accordance with the following functional standards:

MPEG-4:

- ISO/IEC 14496-2 (Profiles ASP and SP)

Power over Ethernet:

- IEEE 802.3af - Class 2

Camera Mounts (Dome Cameras)

The outdoor mount assembly shall include the AXIS Gooseneck Outdoor wall mount (model 25736), and the AXIS Pole Mount (model 21896). The housing assembly and mounting hardware shall be provided with mounting bolts, banding straps and clips and a banding tool for the installation of the pole mount.

The Dome housing shall consist of a power supply connection module and a 10/100BaseTX Ethernet network (RJ-45) port.

Power Supply

The power supply shall be the AXIS PS-24 (model 5000-001) or approved equivalent in all aspects and features. The unit shall provide 24 VAC to the camera housing from a 120 VAC power source and be IP66 rated.

License

The Manufacturer/Vendor shall provide required full license for viewing and managing the provided CCTV camera on the Axis Camera Management System.

Warranty

The Manufacturer/Vendor shall warrant the Closed Circuit Television Cameras and its components against all defects for five (5) years from the date of acceptance of the project by the City.

Support

The CONTRACTOR shall arrange to have a qualified person for the Axis Communication system to provide full configuration of the camera with the City's system and shall also provide at least eight (8) hours of training to the City Staff. The training shall be at a time and location that shall be determined by the Engineer.

Replace section 86-6.02 with:

86-6.02 LED LUMINAIRES

The contractor shall furnish and install the LED luminaires shown on the plans for the traffic signal lighting. Luminaires must be either Cree/Beta LED way Series, or Leotek Green Cobra. Luminaire models must be on the latest Caltrans QPL list and must use less than 150 watts of power.

Replace Section 86-6.08C with:

86-6.08C Street Light Banners

Sign fixture must be:

1. Designed and constructed to prevent deformation or failure when subjected to an 85 mph, 3-second wind-gust load as specified in AASHTO publication, "Standard Specifications for Structural Supports of Highway Signs, Luminaires and Traffic Signals," and its interim revisions
2. Fabricated from all new material

Banners must be constructed of 18oz heavy-duty vinyl, double-sided with sewn hems and top and bottom pole pockets. A banner must be placed on each new street light pole.

Information to be placed on banners will be provided at least 90 days prior to banners being installed. You must notify the Engineer a minimum of 120 days prior to the banners being installed.

The Engineer will provide the actual wording and symbols of the banner. For bidding purposes, the banner will be similar to the following:

Add to Section 86-7:

86-7.03 REMOVING, REINSTALLING OR SALVAGING ELECTRICAL EQUIPMENT

Salvaged electrical equipment shall be delivered to the City Corporation Yard and stockpiled or as otherwise directed by the Engineer.

All deliveries shall be completed prior to 3:30 p.m., Monday through Friday on regular workdays.

The Contractor shall provide equipment, as necessary, to safely unload and stockpile the material.

Add to section 86-8.01:

Payment for highway lighting at intersections in connection with signals is included in the payment for signal and lighting.
Payment for other roadway lighting on the project is included in the payment for Street Lighting.

Payment for furnishing and installing street light banners is included in the payment for Street and Bridge Lighting System.

^^^

96-1.01A(3) Submittals
You must supply two samples and colors relevant to the project.

Submit the manufacturer's warranty documentation as an informational submittal before installing the porcelain enamel sign.

The supplier must provide specific samples of color matching and graphic resolution ability to the customer for approval.

You must provide to the Engineer instruction documentation addressing the care, cleaning and maintenance of materials for incorporation into maintenance manuals.

96-1.01A(4) Quality Control and Assurance

96-1.01A(4)(a) General

The porcelain enamel signs must be The APS must be compatible with the Model 2070L controller assembly.

96-1.01A(4)(b) Warranty

The supplier shall provide a signed written warranty issued in the name of the customer stating that the porcelain enamel signage has a guaranteed life of twenty-five years from date of delivery against fading and five years against spalling, pinholes, discoloration, staining, or rusting.
The supplier shall also certify in writing that the porcelain enameling will be performed in accordance with the current edition of the PEI Technical Manual: section PEI 1001 – "Specification for Architectural Porcelain Enamel on Steel for Exterior Use", as issued by the Porcelain Enamel Institute of WA, DC.

96-1.01B Materials
PORCELAIN ENAMEL: Porcelain enamel on steel is a substantially vitreous (glassy) inorganic coating bonded to metal by fusion at temperatures above 1400 Fahrenheit. Porcelain enamel is not to be confused with baked paints or organic enamels.

STEEL: For purposes of this specification, "steel" is special purpose enameling iron or steel as defined by ASTM A424 Type 1. The standard thickness for most applications is 16 gauge (.060"). If required, the steel can be as thick as 14 gauge (.075"), and as thin as 18 gauge (.048"). Please note that porcelain enamel edge "burn-off" can occur on steel lighter than 16 gauge.

FRITS/GLAZES/OXIDES: Specially formulated porcelain enamel frits, glazes and oxides as supplied by Ferro, Chivit, APEC, Pemco, and Degussa. These materials when combined and processed in final form shall have no less than a Class A acid resistance rating as defined by ASTM C282 Citric Acid Spot Test.

ART: The graphic material and images as supplied by or directed under the supervision of the customer on this project. This includes electronic files, mechanicals, text, photographs, transparencies, film and other graphic source materials.

FASTENERS: Stainless steel or cadmium plated steel.

LAMINATES: Laminate material shall be bonded to the back surface of the porcelain enamel sign panel to meet structural and flatness criteria.

ADHESIVES: Adhesives used to bond laminates shall be neoprene based cement. Adhesive must be water resistant and heat resistant up to 100 degrees C.

96-1.01C Construction

96-1.01C(1) Porcelain Sign Panel
The supplier must submit individual shop drawings from construction drawings based on the art and imaging provided by the Engineer. Fabrication must not commence until said shop drawings have been accepted.

Steel substrates must be machine fabricated in accordance with approved shop drawings and must exhibit straight lines, square corners and/or smooth bends, and must be free of twists, kinks, warps,

dents, and other imperfections which may affect appearance or serviceability. Curved sections must be formed to smooth and even radii.

Finished panels must have a maximum variation of .188” in a convex direction when measured perpendicular to the nominal plane of the panel face. Variation in the concave direction must be limited to .094” from the actual plane of the panel face. These tolerances are for panels with a face area of 8 sq. ft. or less. Proportionately greater allowance will be permitted for panels of greater areas.

Panels of less than 8 square feet shall be square within .063” as measured across the diagonal and within .094” on panels over 8 square feet.

Fusion welds must be free of porosity, inclusions, foreign matter, cracks and pinholes. Any wire or rod fillers used must match the chemical composition of the base metal. All welds shall be ground and sanded smooth to match the radius of the mechanical break. Refer to Porcelain Enamel Institute Technical Manual “PEI-201” section 7.

The cutting of any holes must be made by mechanical equipment and must be completed prior to applying the enamel coating. All machined edges must be sufficiently ground to hold a porcelain coating.

All forming must be via mechanical equipment and must be completed prior to the porcelain enamel coating.

Prior to the enameling process, all parts shall be degreased by immersion in an approved degreasing fluid. Oil residues must be completely removed to ensure proper porcelain adhesion to the steel substrate.

All parts must be adequately rinsed prior to the phosphate coating process.

Immediately after rinsing, all parts must be immersed in a phosphate coating solution to avoid rusting of steel prior to and during the enameling process.

A porcelain enamel ground coat must be applied to all areas of each unit, including backside and flanges, by spraying methods recognized by PEI and VEDC. At least one additional separately fired cover coating must be applied to the face, sides, and flanges of each unit. For corrosion protection and flatness, one additional cover coating must be applied to the backside of each panel.

The cover coat must not exhibit any breaks, gas bubbles, scumming, hairlines, stress lines or other surface defects when visually inspected.

The color and finish must match samples previously submitted by the supplier and accepted within (2) NBS units (Note: a 1-2 NBS unit variation is barely perceptible to the human eye.)

Ground coat and cover coat applications shall be applied in accordance with PEI recommendations to a thickness range between 0.004” to 0.020”, as required by the supplier to suit the intended use.

Panels must be fired at temperatures above 1400 Fahrenheit in a furnace specifically designed for porcelain enamel manufacturing. After firing, each panel shall be submitted to a visual inspection compared to the customer approved control sample for color consistency.

96-1.01C(2) Art and Imaging

Art and Imaging patterns will be provided a minimum of 150 days to the Contractor by the Engineer prior to the scheduled installation. The art and imaging patterns will be placed on porcelain enamel signs that will be attached to the inset on the barrier pilasters as shown on the “Barrier Details No. 2” sheet. The Engineer will also provide the specific barrier pilaster location of the individual porcelain sign panels. You must provide notification to the Engineer 180 days prior to the scheduled installation. The supplier must produce film positives and / or negatives from mechanical artwork or electronic art files as supplied by the Engineer.

All artwork, including laser separations, digital color composites, color keys, bluelines, and/or full size film must be submitted to the Engineer for acceptance before it is reproduced in porcelain enamel.

Original artwork must not be harmed in any way (writing, cutting, folding, rough handling, etc.) and must be returned to the Engineer upon successful completion and acceptance of the project.

The application of graphics must be done using various imaging techniques as required to satisfy the design intent.

Line art and / or spot color must be printed over background colors in perfect registration, with uniform edges, at a minimum output resolution of 1200 DPI. Line weight thickness must be printed at a minimum of 1/2 point and type shall be printed at a minimum size of 6 points. The Contractor is responsible for the appropriate trapping where colors touch.

For panels up to nine square feet, four color process imaging must be in perfect registration in a resolution of not less than 175 lines per inch (LPI). Note: 175 LPI requires a minimum input resolution of 300 dots per inch (DPI) at full size, and a minimum output resolution of 3000 DPI. For panels greater than nine square feet, four color process imaging must be in perfect registration in a resolution of not less than 150 LPI (200 DPI minimum input resolution and 2400 DPI minimum output resolution). If requested, Contractor must be able to print at a maximum resolution of 300 LPI (600 DPI input resolution, and 3600 DPI output resolution) for panels which have a maximum dimension of 36” in either direction.

Contractor must be proficient in the following imaging techniques and able to demonstrate capabilities to the customer: reproduction of photographs or original art by halftone, duotone, and four color process, as well as special imaging techniques including hand painting, stencil brushing, spraying textures, and air brushing.

Screen printing pastes must be milled to a 400-mesh particle size or smaller and must have sufficient glass content to be acid-resistant, corrosion proof, opaque, UV proof, and vandal resistant.

The Contractor must demonstrate proficiency in matching a wide range of colors as represented by color systems such as the Pantone Matching System (PMS), Matthews Paints, Toyo Inks, etc.

For bidding purposes, the signs will be similar to the images shown below. There will be 36 total signs. There will be 15 unique Sepia images similar to those shown below, for a total of 30 Sepia image signs. There will be 6 Lincoln Highway color images placed on the porcelain enamel panels as shown below, for a combined total of 36 signs.

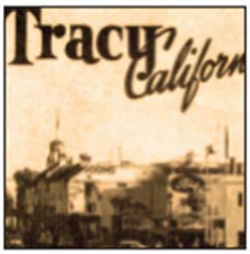

96-1.01C(3) Transport and Delivery

Prior to crating, finished panels must be inspected for blemishes, chips and flatness. Any panel not meeting the requirements of this specification must be rejected and promptly replaced.

All panels must be cleaned in advance of packaging and/or crating.

All sign panels must be packed in wooden crates that completely enclose them from exposure to the environment and/or equipment. The crates must be lined with packing material so as to prevent movement of panels within the crates.

The responsibility of shipping must be established per the contract as agreed upon by the Contractor and Engineer.

96-1.01C(4) Installation

Installation is the responsibility of the Contractor based on supplier recommendations.

When required, apply construction grade adhesive as shown on drawings and /or recommended by supplier.

You are responsible for cleaning the installed porcelain enamel signage with a quality glass cleaner, and ensuring the removal of all fingerprints, silicone, dirt, shavings, adhesive, dust particles, etc.

You are responsible for cleaning the installation site prior to vacating the premises. Individual attention should be given to any and all work areas, barrier and/or walls that may have been soiled during the installation process.

96-1.01D Payment

Not Used

^^^

Install prefabricated bronze plaques by:

1. Attaching the prefabricated bronze plaques as recommended by the manufacturer

97-1.04 PAYMENT

Not Used.

^^^

You are required to submit the method and details for adhering bronze plaque, logos, and lettering to stucco finishing to Engineer for approval.

All stucco must have a smooth trowel finish.

Submittals

In addition to specified submittals, submit any other submittal the Engineer requests.

A. Submit roof framing plan and design calculations. Submittal must include member sizes, materials, connections, and calculations signed and sealed by a Civil or Structural Engineer licensed in the State of California.

B. Within 50 days of Contract approval, submit building construction work action submittals, including:
   1. Shop drawings
   2. Material lists
   3. Product and descriptive data
   4. Samples

C. Submit at least 5 sets and 3 samples for each item. Except for samples, the Department returns 2 copies that show an authorized date or a request for correction and resubmittal.

D. Submit the schedule of values within 20 days of Contract approval. Submit at least 2 sets.

E. Each shop drawing sheet must be at least 11 by 17 inches and at most 24 by 36 inches.

F. Each material list must include the name of manufacturer, catalog number, size, capacity, finish, all pertinent ratings, and identification symbols described.

G. Submit building construction work submittals to the Engineer. Notify the Engineer of the submittal. Include the date and contents of the submittal in the notification.

H. Allow 20 days for the review.

I. Dispose of samples not incorporated in the work.

J. Submit 3 copies of the following items as informational submittals:
   1. Part lists and service instructions packaged with or accompanying the equipment
   2. Operating and maintenance instructions
   3. Manufacturer's warranties
   4. Qualification data

Payment

Price per each includes all submittals and work involved in the design of the roof, roof framing, and connections to the entry monument, and the fabrication, installation, and construction of the entry monuments, including grading, excavation, backfill, concrete, concrete coloring, footing, base, curb, all reinforcement, expansion joint filler, metal roof plywood, framing, fabrication and installation, top cap, drain pipes, stucco, painting, coloring, and texturing, logos, lettering, and miscellaneous metal including bolts, nuts, washers, plates, and galvanizing.